# LEOLA SEWER AUTHORITY

# UPPER LEACOCK TOWNSHIP
# WATER DEPARTMENT

## SPECIFICATIONS FOR
## ADDITIONS and EXTENSIONS
## TO THE WATER SYSTEM

LEOLA SEWER AUTHORITY

# SPECIFICATIONS FOR ADDITIONS AND EXTENSIONS TO THE WATER SYSTEM

AUGUST 1996

*Revised January 2001*

TABLE OF CONTENTS

APPENDIX 1

Water Main Leakage Test Forms

APPENDIX 2

Standard Details

| | Detail No. |
|---|---|
| Pavement Restoration Detail for Upper Leacock Township Roads | 1 |
| Pavement Restoration Detail for West Earl Township Roads | 2 |
| Pavement Restoration Detail for State Roads | 3 |
| Pavement Restoration Detail at Road Crossings | 4 |
| Pavement Restoration Detail for New Township Roads | 5 |
| Lawn Restoration Detail | 6 |
| Water Main Crossing Utilities Using Joint Deflections | 7 |
| Standard Fire Hydrant Setting Detail | 8 |
| Typical Blow-off Hydrant Detail | 9 |
| Standard Water Service Line Installation (Roadway with Curbing) | 10 |
| Standard Water Service Line Installation (Roadway without Curbing) | 11 |
| Standard Casing Cradle Detail | 12 |
| Standard Concrete Encasing Detail | 13 |
| Air Release Valve and Manhole Detail | 14 |
| Restrained Pipe Length Schedule | 15 |
| Horizontal Restraint Thrust Blocking Detail - Plugs | 16 |

APPENDIX 3

Sample Developer's Agreement

# SECTION 1

# GENERAL INFORMATION

## SECTION 1 - GENERAL INFORMATION

### 1.1 SCOPE

These specifications cover the requirements for additions and extensions to the Leola Sewer Authority's water system. All additions and extensions shall be completed in accordance with the requirements of the Leola Sewer Authority and these specifications. The work shall include furnishing of all plans, labor, new materials, equipment, supplies, transportation, fuel and power and performing all work as required by the specifications and including such detail drawings as may be required to prosecute the work. The work shall be executed in the best and most workmanlike manner by qualified, careful and experienced workmen.

The Leola Sewer Authority reserves the right to establish special supplemental requirements for any given addition or extension based upon unique features of the specific project, recent changes in standard water works operating and construction practices which may not be reflected within the specifications as herein contained, or for other legal or administrative reasons which the Authority may identify.

### 1.2 SUBMITTALS

Prior to the start of construction, the developer shall submit utility plans for the project to the Authority for review. The Authority will approve Step 3 requests for water service only after approval of these utility plans.

These plans may be part of subdivision or land development plans prepared to meet regulatory requirements pertaining to land development activities, or the plans may be specially prepared to meet the requirements of the Leola Sewer Authority. Four copies of each set of submission documents will be submitted to the Authority. The Authority will cause the proposed additions or extensions, as described in the plans and supporting

documentation to be reviewed by its engineer, solicitor, and Authority staff, as required. When the plans describing the proposed work are found to be acceptable for construction, four copies of the final plans shall be submitted to the Authority for its use during observation of construction. As necessary, additional sets of drawings may be required for attachments to legal agreements which address the provisions through which the extension or addition to the system may be constructed.

All drawings shall show the location of the water mains, valves, fire hydrants, and other necessary water appurtenances required for the completion of the work. All drawings shall incorporate both a plan view and a profile drawing which shall contain the proposed location of the water mains, along with the location of the existing water lines, and existing and proposed storm and sanitary sewer lines, and other underground utilities within the project site.

All drawings shall contain details for the proposed water facilities. Details should be sufficient for construction of the facilities, and should include, but not necessarily be limited to, restoration details, utility crossing details, standard installation details for valves, fire hydrants and other appurtenances, standard casing and concrete encasement details, vault and manhole details, restrained length table, and details of specific connections to the water system.

All drawings shall note that operation of valving, blowoffs, or other water system appurtenances is restricted to authorized Authority personnel.

In the case of submissions which are clearly incomplete or which are significantly non-responsive to the Authority's standards for system additions and extensions, the Authority will reject the proposed submission without extensive review, pending the receipt of plans which reasonably address the Authority's requirements. It shall not be the Authority's responsibility to design such extensions or additions.

## 1.3 AUTHORITY REVIEW COSTS

The developer shall agree to pay all engineering, legal and administrative costs incurred by the Authority in the review of the utility plans. These costs shall be in addition to and separate from any costs which may be required by the Township, the Township Planning Commission or the County Planning Agency.

## 1.4 DEVELOPER'S AGREEMENT

In all cases where a water main will be extended, the Developer shall enter into an agreement with the Authority before commencing any work on the project. A sample agreement between the Authority and the Developer is included in Appendix 3 for reference. The Authority reserves the right to add to, delete from, or modify this sample agreement from time to time, and as required by the specific circumstances of each specific project.

## 1.5 CONSTRUCTION COMPLETION SECURITY

The Developer shall provide the Authority with security to insure completion of the water facilities. This security shall be in the amount of one hundred ten percent (110%) of the construction cost of these facilities. Said security shall be in the form of a completion bond issued by a reputable insurance company and approved by the Authority's Solicitor as to form and manner of execution. In the Authority's discretion, a letter of credit drawn on a lending institution acceptable to the Authority, in the form and manner approved by the Authority's Solicitor, may be substituted, in Authority's discretion, for said completion bond.

## 1.6 CONSTRUCTION OBSERVATION OF THE WORK

The Developer shall establish with the Leola Sewer Authority an escrow account in an amount sufficient to cover the established cost of construction observation, engineering

expenses, administrative expenses, legal expenses, and other charges related to the proposed construction. The amount of the escrow fund for construction-related activities shall be established by the Authority. The Developer, acting through its contractor, shall notify the Leola Sewer Authority three (3) days in advance of the commencement of construction work, so that appropriate construction observation time may be scheduled. No work may be prosecuted in the absence of construction observation, and any work performed without construction observation shall be re-excavated, exposed and observed by the Leola Sewer Authority's representatives as ordered by the Authority. Any defective work, or work not conforming to the specifications is to be replaced to the satisfaction of the Authority at no expense to the Authority. The allowable work days are Monday through Friday of any week excluding holidays. Should the escrow account be depleted prior to completion of the construction, additional escrow funds shall be deposited by the Developer with the Authority. Any unused escrow funds shall be returned to the Developer upon completion of the construction.

## 1.7 RECORD PLANS AND SHOP DRAWINGS

Before acceptance of system extensions and additions, the Developer shall prepare and deliver to the Authority, record plans (one (1) set of reproducible mylars and three (3) sets of prints) delineating the water facilities actually installed. The record plans shall clearly show the location of the water facilities including measurements in feet and inches from curb line and depth of water main in feet and inches, and shall be free of extraneous markings which may obscure the water facilities. The material, size and location of all facilities shall be shown. The location of all valves and fittings shall be triangulated on the plans. The adequacy of the record plans will be determined by the Authority, in its sole discretion. In addition to the record plans, two (2) sets of equipment shop drawings shall be provided to the Authority when requested.

## 1.8 ACCEPTANCE OF SYSTEM EXTENSIONS AND ADDITIONS

After any water facilities have been added to or extended from the existing system, have been satisfactorily tested and approved by the Authority's representatives, and have been placed in operation, the Authority will notify the Developer of its intention to accept dedication of the facilities. No water facility shall become the responsibility of the Leola Sewer Authority until a deed of dedication shall have been fully executed by the Developer and accepted by the Authority. For a period of eighteen (18) months after the date of dedication, the Developer shall guarantee the stability of all materials and equipment and the workmanship of all labor, and shall correct and/or replace all defective materials, equipment and work at its own expense and to the satisfaction of the Authority when notified in writing by the Authority to do so. The Developer shall provide the Authority with security for the aforesaid guarantee in the amount of fifteen percent (15%) of the Authority Engineer's opinion of construction cost but not less than $5,000.00. Said security shall be in the form of a letter of credit from a commercial banking institution acceptable to the Authority and approved by the Authority's Solicitor as to form and manner of execution; or a cash payment to be maintained by the Authority in a non-interest bearing escrow account. Should the Developer not promptly address any defects in the work, the Authority will invoke its security guarantee to provide funds for the repairs.

# SECTION 2

# MATERIALS

## SECTION 2 - MATERIALS

### 2.1 BEDDING AND BACKFILL

A. Pipe bedding and initial backfill material shall be AASHTO No. 8 Coarse Aggregate.

B. Aggregate backfill material shall be PADOT No. 2A or PADOT No. 2RC.

C. Excavated backfill material shall be excavated material approved by the Authority and containing no stones larger than eight (8) inches in maximum dimensions. A maximum of 20% of the backfill volume may be stones so long as the stones are evenly distributed within the material. Excavated backfill material shall be free of organic material, refuse, and frozen material.

### 2.2 WATER MAIN

A. *Minimum Diameter Pipe:* 8-inches, or as required by the Authority.

B. Water main shall be cement lined ductile iron pipe per ANSI/AWWA C 151/A 21.51 and ANSI/AWWA C 150/A 21.50.

C. Wall thickness shall be a minimum of Class 52. The minimum wall thickness shall be based on internal pressure, earth, and live loads, with the addition of corrosion and casting tolerances and shall be determined in accordance with ANSI Standard A21.50, American Standard for the Thickness Design of Ductile-Iron Pipe.

D. Cement mortar linings shall conform to ANSI/AWWA C 103/A 21.4 double thickness.

E. Joints shall be push-on type or mechanical joint type in accordance with ANSI/AWWA C 111/A 21.11, for all pipes except at changes in alignment, valves or other conditions requiring restraints.

F. Fittings shall be ductile iron compact fittings conforming to ANSI/AWWA C 153/A 21.53. All fittings shall have a minimum pressure rating of 250 psi, and shall have cement lining and joints as required above.

G. At the option of the Authority, the contractor shall submit to the Authority, in duplicate, a certification from the manufacturer that all fittings comply with all applicable requirements and standards noted above.

H. *Pipe Thrust Restraint:*

1. Restrained Joint Pipe, manufactured of ductile iron per ANSI/AWWA C 151/A 21.51, with restrained push-on joints. Restraint system shall be designed to allow disassembly of joints, if required.

   a) *Acceptable Manufacturers:*

      1) American Pipe, Flex-Ring or Lok-Ring.

      2) Or Equal.

2. Restrained Joint Pipe, manufactured of ductile iron per ANSI/AWWA C 151/A 21.51, with rigid restrained mechanical joints. Restraint system shall be designed to allow disassembly of joints, if required.

   a) *Acceptable Manufacturers:*

      1) American Pipe, MJ Coupled Joint.

      2) Or Equal.

3. Mechanical joint restraint, utilizing a ductile iron follower gland with twist-off nuts to insure proper restraint against pipe. When twist-off nuts are sheared off, standard hex-heads shall remain. Joint restraint shall have a minimum working pressure of 250 psi, and a minimum safety factor of 2:1.

   a) *Acceptable Manufacturers:*

      1) EBAA Iron, Inc., Megalug.

      2) Or Equal.

4. Tie rods providing full joint restraint and extending to the adjacent fitting or joint as approved by the National Board of Fire Underwriters No. 24, "Standard for Outside Protection". All rods, clamps, nuts, and washers utilized for anchorage shall be steel with tar coating.

5. Restrained mechanical joint retainer glands and concrete reaction backing will not be permitted, with the exception of using concrete reaction backing on dead end plugs.

## 2.3 VALVES

A. *Gate Valves (6"-12" in diameter):*

1. Non-rising stem type when installed underground and rising stem type otherwise.

2. Valve stem seal of such design that allows replacement of O-rings with valve under pressure in the fully open position.

3. Iron body, outside screw and yoke, bronze mounted with resilient-seated wedge conforming to AWWA C 509.

4. Resilient seat of Styrene Butadiene SBR or Urethane Rubber bonded to cast iron wedge.

5. Stem seals of "O"-ring type.

6. Valves equipped with 2-inch square operating nut and open counter-clockwise.

7. Exterior to be asphalt varnish or epoxy coated; interior ferrous metal parts to be epoxy coated, AWWA C 550.

8. *Acceptable Manufacturer:*
   1) Mueller Company.

B. *Valves (Smaller than 3" in Diameter):*

1. Shall be curb stop (See Section 2.5.D) or quarter turn ball curb valve.
2. Ball curb valve shall be equal to Mueller 300 Ball Curb Valve.

C. *Butterfly Valves*:

1. General:
   a) All valves 16" and larger shall be butterfly valves.
   b) Provide mechanical joint valves.
   c) Designed for a working water pressure of 200 psi.
   d) Valves and operators shall conform to AWWA C 504. Valves shall be bubble tight.

2. Body: Cast iron ASTM A 126, Class B.

3. Disc: Cast iron ASTM A 48, Class 40. Disc edge of stainless steel, Type 316 for mating with rubber seat. Flow through design.

4. Seat: Buna N or natural rubber, mechanically retained in the valve body. No mechanical fasteners or retaining rings acceptable.

5. Shaft: Stainless steel ASTM A 564, Type 630, Condition H-1100.

6. Bearings: Self-lubricating.

7. Shaft Seals: Split V-type self-adjusting packing.

8. Operators: Designed and sized in accordance with AWWA C 504. Method for calculating torques as outlined in AWWA C 504 Appendix A. Valves shall open counterclockwise.

9. *Acceptable Manufacturers*:

   a) Henry Pratt Company; Triton Ground Hog.

   b) Or Equal.

D. *Air Release Valves:*

1. The air release valve shall be of the float operated, compound leverage type, stainless steel construction conforming to ASTM A 240 and A 276, and capable of automatically releasing accumulated air from a fluid system while that system is in operation and under pressure. The body and trim shall be cast iron construction conforming to ASTM A 48, Class 35.

2. To assure drop tight shut off, a viton orifice button having an adjustable feature shall be used to seal the valve discharge orifice. The orifice diameter must be sized for use within a given operating pressure range to ensure maximum discharge capacity.

3. The float shall be of all stainless steel construction and capable of withstanding a pressure of 1,000 psi, conforming to ASTM A 240.

4. *Acceptable Manufacturers:*
   a) APCO.
   b) ValMatic.
   c) GA Industries.
   d) Or Equal.

E. *Air/Vacuum Valves:*

1. Air/vacuum valves shall be capable of automatically exhausting large quantities of air during the filling of the water main and allowing air to re-enter during the draining or when a negative pressure occurs.

2. The body and trim shall be cast iron construction conforming to ASTM A126, Class B. The float shall be stainless steel construction conforming to ASTM A240 and A276. The seat shall be of Buna-N construction.

3. *Acceptable Manufacturers:*
   a) APCO.
   b) ValMatic.
   c) GA Industries.
   d) Or Equal.

F. *Combination Air Valves:*

1. Combination air valves shall be capable of exhausting large quantities of air during filling of the water main, releasing small amounts of

accumulated air while under pressure, and allowing air to re-enter during the draining or when a negative pressure occurs.

2. The body and trim shall be cast iron construction conforming to ASTM A126, Class B. The float shall be stainless steel construction conforming to ASTM A240 and A276. The seats shall be of Buna-N construction.

3. *Acceptable Manufacturers:*
   a) APCO.
   b) ValMatic.
   c) GA Industries.
   d) Or Equal.

G. *Pressure Reducing Valve:*

1. *General:*
   a) Designed for at least a 200 psi maximum inlet pressure with a maximum allowable outlet pressure 10% above spring setting or 5 psig, whichever is greater.
   b) Provide bronze trimmed valve with a nitrile or 3/16 inch cloth insert neoprene rubber diaphragm.
   c) Body: Bronze.
   d) Spring Chamber: Cast iron.

2. *Acceptable Manufacturers:*
   a) Hersey Products, Inc.
   b) Watts Regulator, Inc.
   c) Or Equal.

H. *Tapping Sleeve and Valve:*

1. *Design Working Pressure:* 200 psi.

2. *Tapping Sleeve:* AWWA approved construction split sleeve, mechanical joint. Material shall be cast iron, ductile iron, or stainless steel.

3. *Tapping Valve:* Oversize seat rings, standard flange for bolting to sleeve, mechanical or push-on joint with slotted holes for bolting to tapping machine. Tapping valves shall be iron body, bronze mounted with resilient-seated wedge conforming to AWWA C 509, and they shall be vertical, non-rising, stem nut operated. Valves shall be equipped with a 2-inch square operating nut and open counter-clockwise.

4. *Acceptable Manufacturer:*
   a) Mueller Company

I. *Valve Boxes:*

1. For valves 2-inches and larger, provide Buffalo style adjustable roadway type constructed of cast iron, with a shaft provided with screw or sliding type extension pieces, and either round or oval detachable base.

2. Valve boxes shall have a 5 1/4-inch shaft.

3. Box shall have a plug lid fitting into a recessed seat. The lid shall have the word "WATER" cast on the top surface. All parts of the box shall be of gray iron, free from cold shuts and blow holes and shall be painted with black bituminous paint.

4. Valve boxes shall be set at or above the surface of the adjoining ground or roadway and shall be provided for all buried valves. Valve box shall have an adjustable range up to 6-inches above grade.

J. *Precast Reinforced Concrete Manholes*:

1. Materials and Construction: Conforming to requirements specified in ASTM C 478 except as follows:

   a) Concrete: Composition and compressive strength conforming to ASTM C 478 except use Type II or Type III cement in manhole components and increase compressive strength to 4500 psi (at 28 days) in precast bases.

   b) Casting and Curing: Wet cast and steam curing process in accordance with Section 3.6.11 and 3.7.2 of AWWA C 302.

   c) Manhole Steps: Factory installed in manhole components, prealigned vertically, spaced on equal centers, and located the minimum distance from ends of risers and top sections as required by OSHA. Steps shall be of reinforced plastic. Reinforced plastic steps shall be composed of 3/8-inch Grade 60, ASTM A 615 deformed steel reinforcing bar completely encapsulating in Grade 49108, ASTM D2146 polypropylene copolymer compound, Type II; M. A. Industries, Inc., Type PS4, or equal.

   d) Manhole Component Seals: Manhole component joints factory formed for self-centering concrete to concrete bearing employing either a rubber compression gasket or preformed plastic sealing compound.

      1) Rubber Compression Gasket: Composition conforming to ASTM C 361 or ASTM C 443.

      2) Preformed Plastic Sealing Compound: Fed. Spec. SS-S-210A, Type 1, Rope Form, of either bitumastic base compound or butyl rubber base compound, and shipped

protected in a removable two-piece wrapper. Size cross-section of rope form to provide squeeze-out of material around entire interior and exterior circumference when joint is completed.

e) Precast Top Sections: Designs as required by Drawings, of materials and construction as specified previously except additional and differing requirements as follows:

1) Hold Down Bolt Inserts: Factory cast in top section no less than two 3/4-inch threaded inserts or slotted inserts to accommodate manhole frame hold down bolts. Threaded inserts of 3-inches depth. Both insert types designed for an ultimate load in tension of 12,500 pounds. Inserts factory plugged for shipping. Coordinate insert location with manhole component manufacturer to assure proper location in top sections. Hold down bolts to be used only outside of paved areas.

f) Manhole Frame and Cover:

1) Finish: Bearing surfaces machined to prevent rocking and rattling under traffic. Casting surfaces shotblast cleaned and coated with asphalt paint, non-tacky drying.

2) Identification: Cast the word WATER integrally on cover in 2-inch size raised letters.

3) Frame Hold-down Bolts: ASTM A 307.

4) Cover Gasket: One piece 0-ring gasket factory installed in a machined rectangular or dovetail groove in the cover bearing surface.

- Gasket material of neoprene composition having good abrasion resistance low compression set, Type D 40 durometer hardness determined in accordance with ASTM D2240.
- Gluing of gasket is not permitted.

5) Tensile Test Bar: Size B, cast separately, but poured from same iron as castings they represent.

g) Cast-In-Place Concrete Materials: All cast-in-place concrete materials shall be approved by the Authority Engineer.

K. *Couplings:*

1. *Design Working Pressure:* 200 psi.
2. *Application*: Field joints shall be made with this type of coupling.
3. Coupling: Couplings shall be Dresser Steel Couplings, Style 38, a gasketed, sleeve type with diameter to properly fit the pipe. All materials shall be Type 304 stainless steel. Gaskets shall be Grade 27, Buns S Blend.
4. *Acceptable Manufacturer:*

   a) Dresser Manufacturing Division, Bradford, PA or approved equal.

## 2.4 FIRE HYDRANTS

A. Shall be cast iron body, fully bronze mounted, suitable for a working pressure of 150 psi, and shall conform to AWWA Standard C 502, latest revision. Hydrants shall be constructed in a manner permitting withdrawal of internal working parts without disturbing the barrel or casing. Valve, when shut, shall be reasonably tight when upper portion of barrel is broken off. Each hydrant shall be shop tested to hydrostatic pressure of 300 psi with valve in both open and closed positions.

B. All public fire hydrants served by the water distribution facilities of the Authority shall conform to the following minimum standards:

*Number of Connections:*

One -- 4-1/2-inch connection

Two -- 2-1/2-inch connections

*National Standard Threads (NH):*

| Connection | Outside Diameter (Male) | Threads Per Inch |
|---|---|---|
| 2-1/2-inch | 3.0686 inches | 7-1/2 |
| 4-1/2-inch | 5.7609 inches | 4 |

C. The standpipe shall be connected to the ground line either by a frangible coupling or by flanges with frangible cast iron bolts. The main valve rod at the ground line shall be connected employing a frangible coupling. Hydrants shall be provided with an "0" ring type seal plate. The seal plate shall be fitted with at least two "0" rings. The lower "0" ring shall serve as the pressure seal and the upper "0" ring as a combined dirt and moisture seal.

D. The main valve shall be 5-1/4-inch diameter and shall open left with the direction of opening cast on head of hydrant. Hose nipples shall be bronze or non-corrosive metal. Nipple caps shall be securely chained to the barrel. The hydrant shall be currently dated.

E. Hydrants shall be painted with an approved paint of color as directed by the Authority, after their installation.

F. Hydrants shall be equipped with Polyshield fiberglass markers or approved equal. Markers shall be mounted to hydrant with a galvanized steel bracket as provided by manufacturer of the marker. Color to match existing Township Installations. Local supplier: Exeter Supply Inc., (717) 898-2467

G. *Acceptable Manufacturer:*

1. Mueller Super Centurion. 250

H. All hydrants installed and those associated connections shall use the "AquaGrip Connection System," available only from Mueller.

## 2.5 SERVICE CONNECTIONS

A. *Bedding:* Type A Silica Sand containing no slag.

B. *Service Tubing:* 3/4-inch diameter (minimum) Type "K" copper, ASTM B88.

C. *Corporation Stop:* Brass, including coupling nut for compression service pipe connection.

1. *Acceptable Manufacturer:* 3/4"-1" H 25008 1 1/2"-2" B 25008
   a) Mueller Co. (H-15008).
   b) Ford (F-1000-Q)

D. *Curb Stop:* Brass compression connections.

1. *Acceptable Manufacturer:* 3/4"-1" H 25209 1 1/2"-2" - B 25209
   a) Mueller Co. (H-15209, Oriseal Series).
   b) Ford (B44-Q)

E. *Curb Box:* Cast iron extension type with arch pattern base. Provide box heights as required. Tough gray iron, free from cold shuts and blow holes and painted with black bituminous paint. Extension range as required. Curb boxes are to be used on curb stops less than 2 inches. Curb box shall have "WATER" marked on lid.

1. *Acceptable Manufacturer:*
   a) Bingham Tayler; (B 1).
   b) Mueller Co.; (H-10314, Lid No. 89982).
   c) Or Equal.

F. *Fittings for Copper Tubing:*

1. Fittings for use with copper tubing installed underground shall be of the compression connection type.

2. *Acceptable Manufacturer:*

a) Mueller Co.; (H-15403).

b) Ford (C-44Q)

G. *Trench backfill:* Excavated material approved by the Authority and containing no stones larger than eight (8) inches in maximum dimensions. A maximum of 20% of the backfill volume may be stones so long as the stones are evenly distributed within the material. Backfill material shall be free of organic material, refuse and frozen material.

## 2.6 CASING PIPE MATERIALS

A. *Steel Casing Pipe:* ASTM A 53.

1. 35,000 psi minimum yield strength.
2. Full circumference welded joints.
3. Asphalt coated.
4. *Minimum Wall Thickness:* 0.375 inch.
5. Steel casing pipe diameter shall be at least six (6) inches larger than the outside diameter of the pipe bell, or as required by the owner of the right-of-way, entity issuing the permit, or the Authority, whichever is greater.
6. Smooth wall steel pipes with a nominal diameter of over 54 inches will not be permitted.

B. *Casing Spacer:* Constructed of two piece solid fusion shell of epoxy coated carbon steel, 14 gauge thickness; runners made from ultra high molecular weight (UHMW) polymer and attached to T-304 stainless steel risers; fasteners shall be T-304 stainless steel. Provide casing spacers similar to Model CCS as manufactured by Advance Products & Systems, Inc. (APS), Cascade Waterworks Co., or equal.

C. *End Seals*: Rubber with T-304 stainless steel bands.

## 2.7 PAVING AND RESURFACING

A. Subbase:

1. Coarse Aggregate: Type C, or better, stone conforming to PDT Section 703.2, No. 2A aggregate.

B. Coarse Aggregate Base Course:

1. Coarse Material: Crushed Type A, or better, stone conforming to PDT Section 703.2, AASHTO No. 1.
2. Fine Material: Crushed Type A, or better, stone conforming to PDT Section 703.2, AASHTO No. 10.
3. Select Granular Material (2RC): Crushed gravel, stone or slag conforming to PDT Section 703.3.

C. Plain Cement Concrete Base Course:

1. High early strength cement concrete (HES) conforming to PDT Section 704.
2. Class A cement concrete (normal strength) conforming to PDT Section 704.

D. Cement Concrete Pavement:

1. Conforming to PDT Section 501.

E. Bituminous Materials and Pavements:

1. Asphalt Cement: AC-20 conforming to PDT Bulletin 25.
2. Temporary Paving: Type 2-P Bituminous Stockpile Patching Material conforming to Section 484 of Bulletin 27.
3. Bituminous Concrete Base Course: Conforming to PDT Section 305; mixture limited to asphalt cement.
4. Bituminous Tack Coat: Class E-1, E-6 or E-8 emulsified asphalt conforming to PDT Bulletin 25.

5. Bituminous Prime Coat: Conforming to bituminous material requirements of PDT Section 461.2(a).
6. Binder Course: Hot mixed, hot laid, Bituminous Binder Course ID-2 conforming to PDT Section 421, using asphalt cement.
7. Wearing Course: Hot mixed, hot laid, Bituminous Wearing Course ID-2: Conforming to PDT Section 420.
8. Paved Shoulders, Type 3: Conforming to PDT Section 653.2.
9. Paved Shoulders, Type 4: Conforming to PDT Section 654.2.
10. Paved Shoulders, Type 6: Conforming to PDT Section 656.2.
11. Bituminous Seal Coat: Conforming to PDT Section 470.2.
12. Bituminous Surface Treatment: Conforming to PDT Section 480.2.

F. Stabilized Shoulder:

1. AASHTO No. 8 Aggregate: Conforming to PDT Section 703.2, Course Aggregate.
2. Bituminous Material: Conforming to PDT Section 470.2.

G. Cement Concrete:

1. For driveways, Class AA conforming to PDT Section 704.
2. For curbs, gutters and sidewalks, Class A conforming to PDT Section 704.

H. Aggregate Surface:

1. Select Granular Material (2RC) conforming to PDT Section 703.3.

## 2.8 MAJOR FACILITIES

In cases where major facilities such as water supplies, water treatment facilities or booster pumping stations are proposed, the Developer shall meet with the Authority prior to commencing design of these facilities to determine the specific criteria and standards to be used in the design. As with all other facilities, the Developer must receive approval of the design before commencing construction of the facilities.

# SECTION 3

# INSTALLATION

## SECTION 3 - INSTALLATION

### 3.1 TRENCH PREPARATION AND EXCAVATION

A. Perform sheeting and shoring as required.

B. Submit a Soil and Erosion Plan to the Authority for approval prior to any construction.

C. *General:* Excavation of every description and of whatever substances encountered shall be performed in accordance with all applicable Federal, State, and Local requirements.

1. Excavation shall be made by open cut, unless tunneling or boring is required.

2. Trenches may be excavated and backfilled either by machinery or by hand as the Contractor may elect, provided, however, the Contractor shall use hand excavation where necessary to protect existing structures, utilities, or private or public properties and provided, further, that backfilling shall be done by hand to the extent hereinafter specified.

D. *Stripping, Storing and Restoring Surface Items:* The Contractor shall remove all paving, sub-paving, curbing, gutters, brick, paving block, granite curbing, flagging or other similar materials, and grub and clear the surface over the area to be excavated. He shall properly store and preserve such materials that may be required for future use in restoring the surface. The Contractor shall be responsible for any loss or damage to said materials because of careless removal or neglectful or wasteful storage, disposal, or use of the materials.

The Contractor shall restore all shrubbery, fences, poles or other property and surface structures, removed or disturbed as a part of the work, to a condition equal to that before the work began, furnishing all labor and materials incidental thereto.

E. *Width of Trench:* Pipe trenches shall be sufficiently true in alignment to permit the pipe to be laid in the approximate center of the trench. The trench shall be wide enough to provide a free working space on each side of the pipe.

F. *Length of Trench:*

1. No trench shall be opened more than 100 feet in advance of the pipelines laid.

2. The Contractor shall limit all trench openings to a distance commensurate with all rules of safety.

3. If the work is stopped either totally or partially, the Contractor shall refill the trench and temporarily repave over the same and the trench shall not be opened until he is ready to proceed with the construction of the pipeline.

4. The length of open trench shall not exceed what the contractor can complete within that working day.

G. *Pumping and Draining:* The Contractor shall remove by pumping, draining, or otherwise, any water which may accumulate in the trenches and other excavations and shall build all dams and do all other work necessary to keep the trenches or other excavation as free from water as possible.

H. *Accommodations of Drainage:* The Contractor shall keep gutters, sewers, drains and ditches open at all times so that the flow of storm or other waters shall not be obstructed. If the material excavated from the trenches must temporarily extend

over gutters or other waterways, it shall be the duty of the Contractor to plank or bridge over the gutters so that the flow of water is not impeded.

I. *Permitting and Maintenance of Traffic:* The developer shall secure the necessary State highway and municipal permits for work within state highway and municipal streets. The developer's contractor shall comply with all PA Department of Transportation (PADOT) and municipal laws, rules and regulations, and ordinances, including but not limited to furnishing bonds and insurance required and the cost of inspection of the work. All highway inspection fees charged by PADOT shall be paid by the developer.

Work shall be conducted so as to cause a minimum of inconvenience to pedestrian and vehicular traffic and to private and public properties along the line of work. It shall be the duty of the Contractor, at all times, to maintain crossing, walks, sidewalks, and other roadways open to traffic and in a satisfactory condition, and to keep all fire hydrants, water valves, fire alarm boxes, and letter boxes accessible for use. Whenever it is necessary to maintain pedestrian traffic over open trenches, a timber bridge at least three feet in width and equipped with side railings shall be provided. When the excavated material will encroach upon sidewalks or private property, planking shall be placed in order to keep the sidewalk or private property clear of excavated material.

Maintenance and protection of traffic on Township streets and State Highways shall be in strict accordance with PA DOT Form 408, Section 900; and Title 67, Chapter 203. The Contractor shall modify the sign locations daily during construction in order to protect that section of highway to be disturbed during that same day.

J. *Blasting and Explosives:* The use of explosives shall be governed by the "Regulations for the Storage, Handling and the Use of Explosives" of the Pennsylvania Department of Labor and Industry.

K. *Protection of Utilities, Property and Structures:* The existence and location of underground utilities as indicated on any plans of the Authority is presented merely to serve as a notification that such utilities do exist in the general proximity of the work. Any utilities not shown, or not located as shown, shall not be cause of the Contractor to deny responsibility for their protection and/or repair during construction.

1. The Contractor shall notify all utility companies in advance of construction to request that underground facilities be located in accordance with Pennsylvania Act 287/172, and shall cooperate with agents of these companies during the progress of the work. Procedures for emergency action and repairs to utilities shall be established with the utility company prior to commencement of the work. During the course of his work, if the Contractor damages any of the aforementioned utilities, he shall immediately follow the procedure of emergency action and repair as established at his own expense.

2. Whenever the Contractor, during the progress of the excavation, shall uncover service pipes or lines, which because of injury or age are in poor condition, he shall immediately notify the proper authority in order that steps may be taken for replacement or repair. Locations of repairs, and the procedures of repairs that have been made shall be recorded by the Contractor.

3. The Contractor shall sustain in their places, and protect from direct or indirect injury, all pipes, conduits, tracks, walls, buildings, and other structures or property in the vicinity of his work, whether above or below the ground, or that may appear in the trench.

4. Operation of valving, blowoffs or other water system appurtenances is restricted to authorized Authority personnel. The Contractor is required to

coordinate his work with the Authority in advance of performing or needing to perform such work. This includes but is not limited to operation of valving required to extend or connect to the existing system. Further, the Authority shall have the right to require a live water stop in lieu of a main shut off using existing valves.

L. *Stream Crossings:*

1. Construct stream crossings in accordance with an approved Stream Crossing Plan and an approved Sedimentation and Erosion Control Plan. Obtain all Federal, State, and Local permits.

2. Make all necessary provisions for cofferdamming, dewatering, and removal of excess excavated material.

3. Maintain the flow in the stream at all times.

4. Where rock is encountered in the stream crossings, do not use forms to construct the concrete encasement; place concrete on firm rock below the pipe and against firm rock on both sides of the pipe to provide a firm bond between the encasement and the rock.

## 3.2 PIPE BEDDING AND TRENCH BACKFILL

A. *Trench Excavation:* The trench shall be excavated to a depth of six (6) inches below the outside diameter of the pipe barrel, or deeper if so specified. The resultant subgrade shall be undisturbed, or compacted as approved. Bedding shall provide uniform and continuous bearing and support for the pipe at every point between bell ends.

B. *Pipe Bedding Beneath and to Centerline of Pipe:* All trenches shall be backfilled, from the bottom of the trench to the centerline of the pipe with bedding material

placed in layers of six (6) inches or less, (uncompacted thickness) and compacted by tamping or other approved mechanical methods. Material shall be simultaneously deposited in the trench for its full width on each side of the pipe and fittings.

C. *Initial Backfill Over Pipe:* From the centerline of the pipe and fittings to a depth of one (1) foot above the top of the pipe, the trench shall be backfilled by hand or by approved mechanical methods. The Contractor shall use special care in placing this portion of the backfill so as to avoid injuring or moving the pipe. The backfill shall be placed in 4-inch layers or less, (uncompacted thickness) and compacted by tamping or other approved mechanical methods.

D. *Aggregate Backfill to Restoration Depth (State and Township Roads, and Driveways):* From one (1) foot above the top of the pipe to restoration depth, the trench shall be backfilled by hand or by approved mechanical methods. Backfill in this section of the trench shall be AASHTO No. 8 material subject to limitations specified and consolidated by tamping in six (6) inch layers or by other approved mechanical methods unless otherwise specified. Any consolidation method utilizing water such as jetting or puddling shall not be permitted. Consolidation shall proceed from the center of the trench to the sides to prevent arching.

E. *Backfill Material to Restoration Depth (Lawns, Meadows and Cultivated Fields):* From one (1) foot above the top of the pipe to restoration depth, the trench shall be backfilled by hand or by approved mechanical methods. Backfill in this section of the trench shall be excavated material subject to limitations specified and consolidated by tamping in eight (8) inch layers or by other approved mechanical methods unless otherwise specified. Any consolidation method utilizing water, such as jetting or puddling shall not be permitted. Consolidation shall proceed from the center of the trench to the sides to prevent arching.

F. *Backfilling Methods:*

1. *General:* Backfilling shall not be done in freezing weather except by permission of the Authority, and it shall not be done with frozen material. Do not backfill when the material already in the trench is frozen.

2. Compact trench backfill as follows:

   a) Use mechanical tampers to compact backfill materials in trench refill operations to produce a density of backfill at the bottom of each layer of not less than 90 percent of maximum density obtained at optimum moisture content as determined by AASHTO T 99. The contractor shall perform field determinations of density, when requested, in accordance with AASHTO T 191.

   b) All trench excavation and backfill within State Highway right-of-way will be subject to inspection by representatives of the Commonwealth of Pennsylvania, Department of Transportation, and the work must be performed in accordance with the requirements of that department. The contractor shall have no claim to the Authority even though such requirements may entail more labor or services than the methods herein described.

G. *Special Bedding:*

1. *Concrete Cradle and Concrete Encasement:* If concrete cradle and/or encasement is required, the trench shall be excavated to a depth of six (6) inches below the outside of the barrel of pipes.

2. *Unstable Subgrade:* Where the bottom of the trench at subgrade is found to be unstable or to include ashes, cinders, any type of refuse, vegetable, or other organic material, or large pieces or fragments of inorganic material, the Contractor shall excavate and remove such unsuitable material to a width and depth approved by the Authority. The contractor shall have no claim to the Authority for this additional excavation.

3. *Excavation in Fill:* When the pipe is laid in fill, the compacted embankment shall be brought to a height of at least 9 inches above the proposed top of the pipe before the trench is excavated.

3.3 PIPE

A. *General:* All pipe shall be laid and maintained to the required lines and grades with fittings and valves at the required locations, spigots centered in bells, and all valves plumb.

1. The pipe shall be laid in the backfill materials as specified in Section 3.2.

2. A construction sequencing plan, including proposed methods of connection to existing, active waterlines, of filling new waterlines for testing, and of testing new waterlines, shall be submitted to the Authority before beginning any waterline construction work.

3. All water mains shall extend to the far property line of the last property proposed to be served during a given system extension or addition.

B. *Construction Control:* During the installation of a water main, the pipe shall be laid at a constantly increasing grade to each high point, air release manhole, or point of discharge. The Contractor shall provide sufficient construction control to assure that there are no sags or loss in grade in the pipeline which could tend to

accumulate air. Failure to comply with this requirement shall necessitate that the Contractor take remedial steps to correct this situation.

C. *Water Mains on Steep Slopes:* Water mains on slopes of 15 percent or greater shall be anchored securely with concrete anchors. Spacing of anchors is subject to approval of the Authority on a case-by-case basis.

D. *Anchorage:* All plugs, caps, tees, and bends (both horizontal and vertical) shall be restrained to prevent movement. The Contractor shall submit a drawing and obtain the Authority's approval for the anchorage of the pipe and fittings at each connection, or at any locations designated by the Authority.

When the water mains must be tested before connections to existing mains can be completed, temporary restraint shall be installed.

E. *Depth of Pipe:* All pipe shall be laid to a minimum of 4-feet, 0-inches from grade to the crown of pipe, unless otherwise approved by the Authority.

F. *Separation of Water Mains, Sanitary Sewers and Storm Sewers:*

1. *Parallel Installation:* Water mains shall be laid at least 10 feet horizontally from any existing or proposed sewer. The distance shall be measured edge to edge. In cases where it is not practical to maintain a 10 foot separation, deviations may be allowed, subject to the approval of the Authority.

2. *Crossings:* Whenever water mains must cross building drains, storm drains, or sanitary sewers, the water main shall be laid at such an elevation that the bottom of the water main is 18 inches above the top of the drain or sewer. This vertical separation shall be maintained for the portion of the water main located within 10 feet horizontally of any sewer or drain it

crosses. The 10 feet is to be measured as a perpendicular distance from the drain or sewer line to the waterline.

a) Where water mains must cross under a sewer line, additional protection shall be provided by:

   1) A vertical separation of at least 18 inches between the bottom of the sewer line and the top of the water line.

   2) Adequate structural support for the sewers to prevent excessive deflection of the joints and the settling on and breaking of the water line.

   3) That the length of the water line be centered at the point of the crossing so that the joints shall be equidistant and as far as possible from the sewer line.

b) If any of the above conditions cannot be met, encasement shall be utilized, and installed per AWWA C 105 Specifications, Method A or B. The encasement shall extend ten feet in each direction from the crossing measured perpendicular to the sewer or storm drain.

c) The Contractor is responsible for providing all fittings, anchorage, excavation, backfill, as required to cross any and all sanitary sewer lines and appurtenances and storm drain lines within the above requirements.

d) All crossings must meet the requirements of the latest Pennsylvania Department of Environmental Resources Water Supply Manual.

e) The Authority reserves the right to review and govern water main crossings and separation of other utilities, including but not limited to gas and oil pipe lines.

G. *Handling of Pipeline Materials Into Trench:* Proper implements, tools and facilities satisfactory to the Authority shall be provided and used by the Contractor for the safe and convenient prosecution of the work.

H. *Cleaning Pipe and Fittings:* All lumps, blisters, and excess coal tar coating shall be removed from the bell and spigot end of each pipe; and the outside of the spigot and the inside of the bell shall be wire-brushed and wiped clean and dry and free from oil and grease before the pipe is laid.

I. *Laying Pipe:* Every precaution shall be taken to prevent foreign material from entering the pipe while the pipe is being placed in the trench. After placing a length of pipe in the trench, the spigot end shall be centered in the bell or coupling and the pipe forced home and brought to correct line and grade. The pipe shall be secured in place with approved backfill material tamped under it except at the joints. Pipe and fittings which do not allow a sufficient and uniform space for joints shall be removed and replaced with pipe and fittings of proper dimensions to insure such uniform space. Precautions shall be taken to prevent dirt from entering the joint space.

1. At times when pipe-laying is not in progress, the open ends of pipe shall be closed by a watertight plug or other approved means. This provision shall apply during the lunch hour or any extended break period, as well as overnight. If water is in the trench, the seal shall remain in place until the trench is pumped completely dry.

J. *Cutting Pipe:* The cutting of pipe for inserting valves, fittings or closure pieces shall be done in a neat and workmanlike manner, without damage to the pipe, so as to leave a smooth end at right angles to the axis of the pipe.

K. *Bell Ends to Face Direction of Laying:* Bell and spigot pipe shall be laid with bell ends facing in the direction of laying.

L. *Permissible Deflection of Joints:* If deflection is required, make after joint is assembled. The amount of deflection shall not exceed the maximum limits as

specified in the AWWA Standard C 600. Restrained joints must be capable of being deflected up to the maximum limits as specified in the AWWA Standard C 600, for push-on type joints.

M. *Unsuitable Conditions for Laying Pipe:* No pipe shall be laid in water or when, in the opinion of the Authority, trench conditions are unsuitable.

N. *Jointing Ductile Iron Pipe:*

1. *Mechanical Joints:* The spigot end of the pipe shall be centrally located in the bell so that the rubber gasket is evenly seated.
   a) All loose rust or foreign matter shall be removed from the inside surfaces of the bell and outside surface of the spigot prior to assembly. Bolts shall be tightened uniformly with a rachet wrench so as to effect the joint seal.
   b) If effective sealing is not attained at the maximum torque recommended by the manufacturer, the joint shall be disassembled and reassembled after thorough cleaning.

2. *Push-On Type Joints:* The joint shall be assembled as recommended by the manufacturer so as to effect the joint seal.

3. *Restrained Joints:* The joint shall be assembled in accordance with the manufacturer's recommendations.

O. *Testing of Installed Pipe:*

1. *Hydrostatic Tests:*
   a) *Pressure Test:* After the pipe has been laid and backfilled as specified, all newly laid pipe, or any valved section thereof, shall be subjected to a hydrostatic pressure of 150 pounds per square

inch, or 50% in excess of the normal working pressure, whichever is greater.

1) Duration of Test shall be at least two hours.

2) *Procedure:* Each section of pipe shall be slowly filled with water and the specified test pressure, based on the elevation of the lowest point of the line or section under test and corrected to the elevation of the test gauge, shall be applied by means of a pump connected to the pipe in a manner satisfactory to the Authority. The pump, pipe connections, and all necessary apparatus, including gauges, shall be furnished by the Contractor and are subject to approval by the Authority. The Contractor will make all taps into the pipe, and furnish all necessary assistance for conducting the tests. The Contractor shall supply either a container calibrated in 0.1 gallon increments or a laboratory certified calibrated water meter accurate to 0.1 gallons.

3) *Expelling Air Before Test:* Before applying the specified test pressure, all air shall be expelled from the pipe. If permanent air vents are not located at all high points, the Contractor shall make the necessary taps at such points before the test is made. After the test has been completed the Contractor shall remove and plug the taps or leave them in place at the direction of the Authority.

4) *Examination Under Pressure:* Any cracks or defective pipes, fittings, or valves discovered in consequence of this pressure test shall be removed and replaced by the Contractor with sound material, and the test shall be repeated until satisfactory to the Authority.

5) *Test Pressure Variations:* Test pressures shall not vary by more than 5 psi for the duration of the test.

6) *Saturation of Cement Lining:* It is good practice to fill the pipeline to be tested 24 hours in advance of the test to allow the cement lining of the pipe to become saturated.

2. *Leakage Test:* A leakage test shall be conducted concurrently with the pressure test. The Contractor will furnish laboratory calibrated test gauge and measuring device, as described above, and all necessary assistance to conduct the test.

a) *Leakage Definition:* Leakage is defined as the quantity of water that must be supplied into the newly laid pipe, or any section thereof, to maintain pressure within 5 psi of leakage test pressure after the pipe has been filled with water and the air expelled.

b) *Permitted Leakage:* No pipe installed will be accepted until the leakage is less than the number of gallons per hour as determined by the formula:

$$L = \frac{SD\sqrt{P}}{133{,}200}$$

in which "L" equals the allowable leakage in gallons per hour; "S" is the length of pipeline tested in feet; "D" is the nominal diameter of the pipe, in inches, and "P" is the average test pressure during the leakage test, in pounds per square inch gauge. (The allowable leakage according to the formula is equivalent to 11.65 U.S. Gal. per 24 hours per mile of pipe per inch nominal diameter, for pipe in 18 foot lengths evaluated on a pressure basis of 150 psi). When testing against existing closed metal seated valves, an additional leakage per closed valve of 0.0078 gallon per hour per inch of nominal valve size shall be allowed. There shall be no additional leakage allowed for service connections.

1) The Authority will record both the makeup water and pressure at 15 minute intervals during the test period.

2) Should any test of pipe laid disclose leakage greater than that specified above, the Contractor shall, at his own expense, locate, repair, and replace the defective joints, pipe, or fittings until the leakage is within the specified allowance.

3. *Common Requirements:*

a) Authority Presence: The Authority shall monitor the pressure and leakage tests. The Contractor shall notify the Authority of the test day at least two working days in advance.

b) The Authority shall be present during the operating of valves required to fill mains for pressure and leakage tests.

c) Where multiple sections are tested the allowable loss shall be limited to the loss for the smallest main line valve section or 1000 feet whichever is less unless otherwise approved by the Authority.

d) Weather: No testing will be authorized unless air temperature is 35 degrees F. or higher.

e) Hydrants: When hydrants are in the test section, the test shall be made against the closed hydrant.

f) Services: When services are connected to the main prior to testing, testing shall be conducted against the curb stops.

g) Acceptance: Observation of successful testing of water mains by the Authority does not constitute acceptance of the system or any portion thereof. Only upon final inspection by Authority and upon written acceptance for same will the system or portion thereof be considered substantially completed. Upon such acceptance, the warranty period as specified for the water main will commence. If, during this final inspection, any irregularities are observed, the

condition must be corrected at the Contractor's expense prior to acceptance.

h) If the test is applied against an existing valve and the Contractor has determined that said valve is passing, Contractor shall excavate valve at his expense so the Authority can sound valve. In addition to the sound test, test section shall be valved off and pressure applied. The Authority will observe pressure for 24 hours. This section should remain at system pressure if valve is passing.

P. *Disinfection of Installed Pipe:*

1. *General:* After completion of satisfactory pressure and leakage testing, disinfect the water pipelines in accordance with the recommended practice established in AWWA Standard C 651. Conduct water line disinfection in the following steps:

   a) Preliminary flushing
   b) Chlorine application
   c) Final flushing and disposal
   d) Bacteriologic tests

2. *Chlorine Form:* The chlorine form to be applied to the system shall be either chlorine gas solution, calcium hypochlorite or sodium hypochlorite. The Authority's written approval of the chlorine form to be used is required.

3. *Preliminary Flushing:* Prior to disinfection, except when the tablet method is used, fill the line to eliminate air pockets and flush the line at a rate of flow of 2.5 feet per second to remove particulates. Refer to AWWA C 651 for rate of flow to produce 2.5 fps in pipe of various sizes. The Authority shall be notified at least 24 hours in advance of any flushing operation. The Authority shall be present during the operating of valves

required to fill mains. Flushing shall be monitored by the Authority. Dispose of flushing water in accordance with all applicable federal, state and local regulatory agencies.

4. *Chlorine Application:*

a) *Tablet Method:* The tablet method consists of placing calcium hypochlorite granules and tablets in the water main as it is being installed and then filling the main with potable water when installation is completed. This method may be used only if the pipes and appurtenances are kept clean and dry during construction, and only with the approval of the Authority. It shall not be used if trench water or foreign material has entered the main, or if the water temperature is below 41°F.

1) During construction, place calcium hypochlorite granules at the upstream end of the first section of pipe, at the upstream end of each branch main, and at 500 ft. intervals. Refer to AWWA C651 for quantity of granules to be used.

2) During construction, place sufficient number of 5g calcium hypochlorite tablets in each section of pipe, in hydrants, hydrant branches, and other appurtenances. Refer to AWWA C651 for the proper number of 5g calcium hypochlorite tablets required. Attach tablets to the crown of pipe sections with adhesive (Permatex No. 1, or equal). Apply adhesive only to the broad side of the tablet next to the pipe surface.

3) When pipeline installation is completed, fill the main with water at a maximum velocity of one foot per second. Remove all air pockets. This water shall remain in the pipe for at least 24-hours. It the water temperature is less than 41°F, the water shall remain in the pipe for at least 48

hours. Position valves so that the chlorine solution does not flow back into the line supplying the water.

b) *Continuous Feed Method:* The continuous feed method consists of placing calcium hypochlorite granules in the main with potable water during construction, completely filling the main to remove air pockets, flushing to remove particulates, and filling the main with potable water chlorinated so that after a 24-hour holding period in the main there will be a free chlorine residual of not less than 10 mg/L.

1) At the option of the Owner, place calcium hypochlorite granules in pipe sections during construction as detailed in Section 3.3.Q.4.a.1.

2) Conduct preliminary flushing to remove particulates using a flushing velocity of not less than 2.5 feet per second.

3) At a point not more than 10 feet downstream from the beginning of the new main, feed water and chlorine to the line at a constant rate such that the water will have not less than 25 mg/L free chlorine. To assure that this concentration is provided, measure the chlorine concentration at regular intervals in accordance with AWWA Manual M-12. Chlorine application shall not cease until the entire line is filled with heavily chlorinated water.

c) During the 24-hour treatment, operate all valves, curb stops, and hydrants in the section treated.

d) At the completion of the 24-hour treatment, the treated water in all portions of the main shall have a residual of not less than 10 mg/L free chlorine.

e) Repeat the disinfection process until the minimum available chlorine is present at the end of the treatment sequence. The tablet method cannot be used in these subsequent disinfections.

5. *Final Flushing and Disposal:* Within 24-hours after chlorination, flush the heavily chlorinated water from the system under treatment until the chlorine concentration in the water leaving the system is no higher than that generally prevailing in the system or is acceptable for domestic use. Notify the Authority at preliminary flushing.

   It shall be the Contractor's sole responsibility to dispose of the chlorinated water in a manner acceptable to the Pennsylvania Department of Environmental Resources. If it is determined that the chlorinated discharge will cause damage to the environment or to sanitary treatment facilities then a neutralizing agent acceptable to the Authority shall be applied to the water to be wasted to neutralize thoroughly the chlorine residual remaining in the water.

6. *Bacteriological Testing:*

   a) After final flushing is completed and before the water main is placed in service, test the line for bacteriologic quality.

   b) Collect a minimum of one sample at the end of each line for each test, and one sample of the incoming water from the existing water system for comparison.

   c) Collect samples in sterile bottles treated with sodium thiosulfate.

   d) Sampling tap shall consist of corporation stop installed in the main with copper tube gooseneck assembly. No hose or fire hydrant shall be used to collect samples. When sampling is complete, remove gooseneck and cap corporation stop with copper slug.

   e) Provide bacteriological test reports to the Authority. Failure to meet State health standard requirements will be cause for Contractor to rechlorinate and retest the system.

   f) No section of water main shall be approved to be put into service until satisfactory bacteriological test reports for that section have been submitted to the Authority.

g) The Authority reserves the right to test the water at any time prior to final acceptance of the work and if found unsafe bacteriologically, to require the Contractor to rechlorinate the system.

Q. *Installation of Valves:*

1. *General:* Valves and fittings shall be set and jointed to pipe in the manner specified for cleaning, laying, and jointing pipe.

   a) The weight of valves and fittings is not to be supported by pipe.

2. *Valve Boxes and Valve Pits:* A cast iron valve box shall be provided for every valve that is buried. The valve box shall not transmit shock or stress to the valve and shall be centered and plumb over the wrench nut of the valve, with the box cover flush with the surface of the finished pavement or such other level as may be directed. The Authority reserves the right to require that a valve pit be constructed in lieu of a valve box in certain circumstances.

R. *Fire Hydrant Installation:*

1. *Location:* Hydrants shall be located at a maximum separation distance of 500 feet between hydrants, or as directed by the Authority.

2. *Position:* All hydrants shall stand plumb and shall have their nozzles parallel with or at right angles to the curb, with the pumper nozzle facing the curb. Hydrants shall be set to the established grade, with the nozzles at least 12-inches above the ground, and the frangible ring of the hydrant shall be 2-inches above the ground.

3. *Hydrant Drainage in Pervious Soil:* Wherever a hydrant is set in soil that is pervious, drainage shall be provided at the base of the hydrant by placing crushed aggregate as shown on the standard details, assuring that the hydrant drain hole is clear.

4. *Hydrant Drainage in Impervious Soil:* Wherever a hydrant is set in clay or other impervious soil, a drainage pit 2-feet in diameter and 3-feet deep shall be excavated below each hydrant and filled completely with AASHTO No. 57 aggregate, under and around the elbow of the hydrant and to a level of 6-inches above the waste opening, assuring that the hydrant drain hole is clear.

## 3.4 SERVICE LINE

A. Connections to existing mains shall be done by the Authority or under the inspection of the Authority. Coordination of the work with the Authority shall be done at least 2 weeks prior to the start of the work to be done.

B. Screw corporation stops directly into a tapped and threaded ductile iron main as required. Locate corporation stops at least 12-inches apart longitudinally.

C. Use proper seals or other devices to ensure that no leaks are left in the water mains at the points of tapping. Do not backfill and cover the service connection until approved by the Authority.

D. All water service lines or portions thereof installed by open cut shall be bedded and backfilled with Type A silica sand containing no slag.

E. Lay each section of the service line in a manner to form a tight joint with the adjoining section. Avoid offsets, kinks or awkward bends to ensure a smooth flow line.

F. Compression connections shall be utilized at water service joints. Joints shall be a minimum of 100-feet apart.

G. When the work is not in progress and at the end of each work day, securely plug the ends of pipe and fittings to prevent any dirt or foreign substances from entering the lines.

H. The Contractor shall install all services to the edge of the rights-of-way at predetermined locations or as directed by the Authority. Where service lines exist adjacent to and outside of the right-of-way, Contractor shall connect the new service line to the existing, unless otherwise instructed by the Authority.

I. Service lines shall not be less than three and one half (3-1/2) feet below the surface and shall not be re-covered until the Authority has inspected the service, the tap on the main has been made, and the service line has been tested.

J. All plumbing shall be able to withstand the pressure of at least one hundred fifty (150) pounds per square inch, unless otherwise required by the Authority.

K. The maximum length of a service line shall be three hundred (300) feet unless otherwise approved by the Authority.

L. No service pipes shall be laid in the same trench with gas pipe, sewer pipe, or any other facility of a public service company, nor within three (3) feet of any open excavation, fault, conduit, or vault.

M. When pressures exceed 80 psi, the applicant shall, at his own expense, install and maintain on the system side of the meters pressure regulating valves meeting Authority specifications.

N. In areas where concrete curb is provided along the streets, a "W" shall be stamped into the curb before the concrete sets to indicate the location of the service line. The Authority will provide the stamp to the Contractor.

## 3.5 REPLACEMENT OF SERVICES CONNECTED TO AN EXISTING MAIN

A. Where services are required to be removed or broken into for the making of new connections, the work should be done in such a manner as to prevent damage to the remaining work and in an expedient manner to minimize the time that the property owner will be disconnected from the service. Wherever existing work is damaged in making such connections or removals the Contractor will be responsible for the replacement of the damaged section. Existing piping, once removed, shall not be permitted to be reused. Where parts of existing systems are altered, the remaining system shall be properly reconnected as required for proper operation.

B. When existing service lines are to be removed or broken into for the making of new connections and the existing service being severed is still attached to an active main, the Contractor shall be responsible for locating said connections to existing main and make all necessary repairs to disconnect the service from existing water main. The Contractor shall submit to the Authority a description and list of material he proposes to use in such a repair. Approval shall be obtained before using the preceding method of repair from the Authority.

C. Unless otherwise directed, materials resulting from removal operations of service connections shall become the property of the Contractor and shall promptly be removed from the project at his expense.

D. Connections to existing mains shall be done by the Authority or under the inspection of the Authority. Coordination of the work with the Authority shall be done at least 2 weeks prior to the start of the work.

E. *Temporary Services:* In the event it is necessary to interfere with any services, temporary lines shall be installed by the Contractor at his expense. Prior to commencing any work requiring temporary service, the Contractor shall acquire approval from the Authority for the proposed methods to be used to provide the temporary service. Delays resulting in residences or businesses having to go overnight or for longer periods without utilities due to the neglect of the Contractor may be remedied by the Authority at the Contractor's expense without written notice.

## 3.6 CASING PIPE INSTALLATION

A. *Casing Spacers and End Seals:*

1. Secure spacers in the carrier pipe so that movement along carrier pipe barrel will not occur when carrier pipe is inserted into casing pipe.

2. Size spacers so that bell of the carrier pipe does not rest on casing and adequate clearance exists at top of spacers for ease of inserting the carrier pipe into the casing.

3. Placement and spacing of spacers shall be in accordance with manufacturer's recommendations or as indicated on the Drawings.

4. Install end seals in accordance with manufacturer's instructions.

B. All waterlines passing through casing pipes shall have restrained joints.

## 3.7 CONCRETE CRADLE AND ENCASEMENT INSTALLATION

A. *Preparation:* Prior to the formation of the cradle or encasement, temporary supports consisting of solid concrete bricks or cap blocks shall be used to support the pipe in place. Temporary supports shall have minimum dimensions and shall

support the pipe at not more than two locations, one at the bottom of the barrel of the pipe adjacent to the shoulder of the socket, and the other near the spigot end.

B. *Placing:* After jointing of the pipe has been completed, concrete shall be uniformly poured beneath and on both sides of the pipe.

1. Placement shall be done by the use of suitable equipment.

2. The concrete shall be wet enough during placement to permit its flow, without excessive prodding, to all required points around the pipe surface.

3. The width of encasement shall be such as to fill completely the trench width. In case of extremely wide trenches, concrete encasement may be confined above the top of the pipe to a narrower width, but in no case shall it be less than the width of trench required for the size of pipe being used.

4. Before depositing concrete, the space within the limits of the pour shall have been cleared of all debris and water.

5. Water shall not be allowed to rise adjacent to, or flow over, concrete deposited for less than 24 hours.

6. Concrete shall be protected from the direct rays of the sun and kept moist by an approved method for a period of seven (7) days or until backfilling is begun.

7. In no case shall backfilling begin within 36 hours of the time of placing.

## 3.8 RESTORATION

A. *Replacement of Structures by Contractor:* The contractor shall restore (unless otherwise stipulated) all sidewalks, curbings, gutters, shrubbery, fences, poles, sod, markings, traffic lines, or other property and surface structures removed or disturbed as a part of the work to a condition equal to that before the work began, furnishing all labor and materials incidental thereto.

B. Pavement restoration of State and Township roads shall be in accordance with the Authority's Standard Details unless otherwise directed by the State or municipality.

## 3.9 CLEAN-UP AND MAINTENANCE DURING INSTALLATION

A. During construction, surfaces of all areas including, but not limited to, roads, streets, and driveways shall be maintained on a daily basis to produce a safe, desirable, and convenient condition.

1. Streets shall be swept and flushed after backfilling, and recleaned as dust, mud, stones and debris caused by the work, or related to the work again accumulates.

2. Failure of the Contractor to perform this work shall be cause for the Authority to order the work to be done by others, and backcharge all costs to the Contractor.

B. *Repair or Correction of Unsatisfactory Conditions:* All unsatisfactory conditions resulting from the work shall be corrected.

C. *Temporary Pavement:* Continuously maintain temporary pavement until it is replaced with permanent pavement.

D. *Emergency Phone Numbers:* Before commencing any work on the project, the Contractor shall provide the Authority with a list of phone numbers at which responsible Contractor's personnel can be reached 24 hours per day to respond to emergencies.

E. Any subnormal or dangerous condition caused by the work, on any surface, shall be repaired or corrected within two hours of observance or notification of its existence. If repairs or corrections are not made within this period, the Authority shall cause to have the work completed with the resulting cost charged to the Contractor.

# SECTION 4

# BACKFLOW PREVENTION

*SECTION 4 - BACKFLOW PREVENTION*

## 4.1 BACKFLOW PREVENTION

A. Permanent backflow prevention devices are required by Township Ordinance which is hereby incorporated by reference.

B. All temporary connections to the water system shall have backflow prevention devices installed at the point of connection. This includes but is not limited to connections to fire hydrants and water services.

1. A Reduced Pressure Zone Assembly (RPZA) shall be approved by the Authority and shall mean a device that has been manufactured in full compliance with standards established by the American Water Works Association entitled " AWWA C511-89 Standards for Reduced Pressure Zone Devices".
2. Within the previous 12-month period prior to the date of proposed installation said Reduced Pressure Zone Assembly shall have been inspected and approved by a qualified individual licensed in this State, to do so. Contractor shall provide the Authority a certificate to this effect prior to installing any backflow prevention device.
3. If at any time the Authority finds that the maintenance of an existing temporary backflow prevention device constitutes a Health Hazard, the device shall be replaced with a properly functioning device meeting the requirements of this document.

# APPENDIX 1

# WATER MAIN LEAKAGE TEST FORMS

# WATER MAIN LEAKAGE TEST

| Time | Pressure (psi) | Depth (Ft) | Volume ($Ft^3$) | Volume (Gals) | Change in Volume ( ) | Comments |
|---|---|---|---|---|---|---|
| | | | | | | Starting Condit. |
| | | | | | | 1/2 Hour Reading |
| | | | | | | Re-pressure |
| | | | | | | 1 Hour Reading |
| | | | | | | Re-pressure |
| | | | | | | 1 1/2 Hour Reading |
| | | | | | | 2 Hour Reading |
| | | | | | | Re-pressure |

Total Used: _____ For 2 Hour Period

Results:

Allowed Leakage for 2 Hour Period: _____ Gals.

Total Leakage Used for 2 Hour Period: _____ Gals.

Therefore Test Passes / Fails

Note: 7.481 Gals/$Ft^3$

# APPENDIX 2

# STANDARD DETAILS

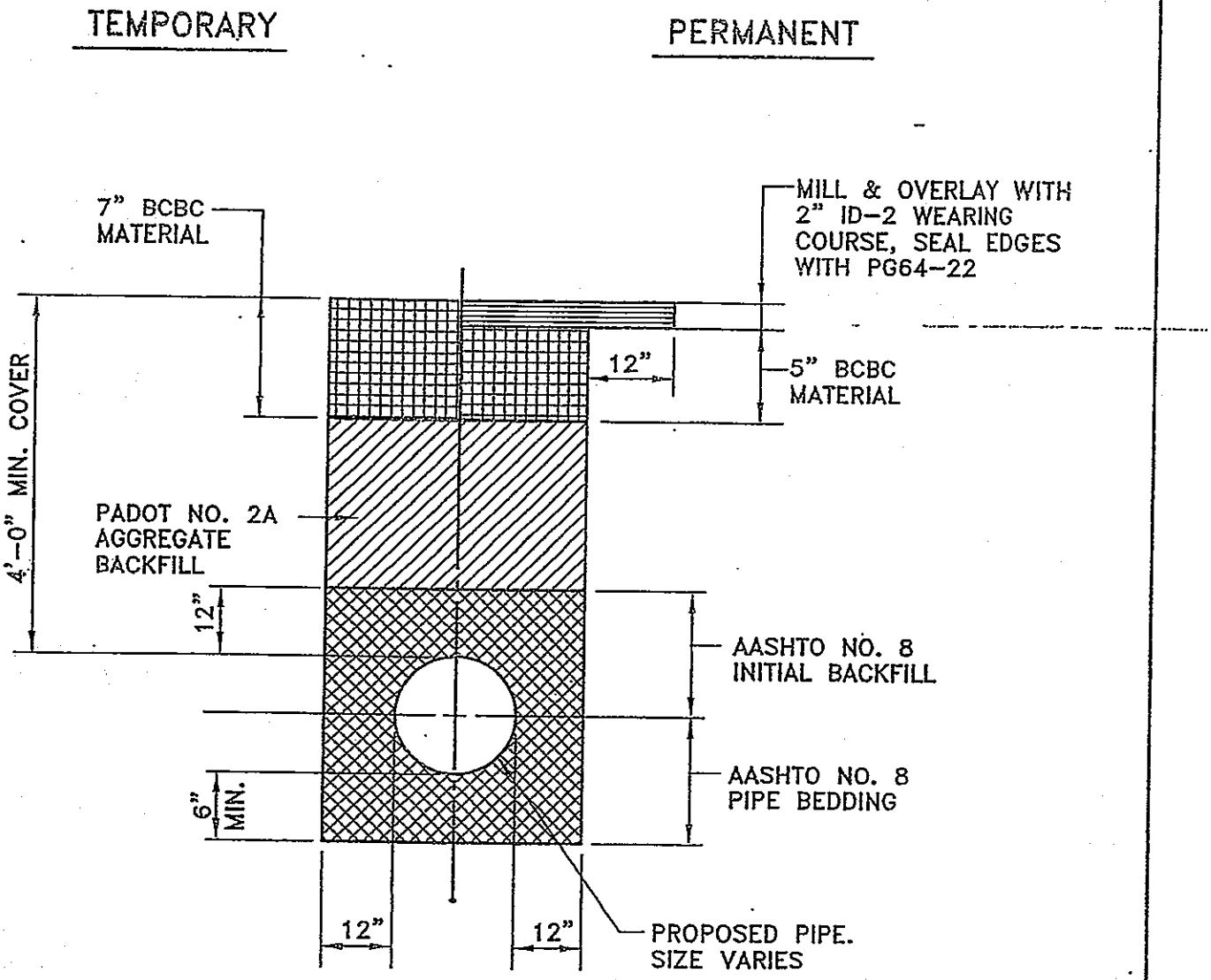


# Leola Sewer Authority

## STANDARD DETAIL - WATER SYSTEM

Hyder

Hyder Consulting, Inc.

# PAVEMENT RESTORATION DETAIL FOR UPPER LEACOCK TOWNSHIP ROADS

DATE: FEBRUARY 2001

DETAIL: 1

Dwg. Name: 00325587.DWG Last Revised: 02/16/01 14:15

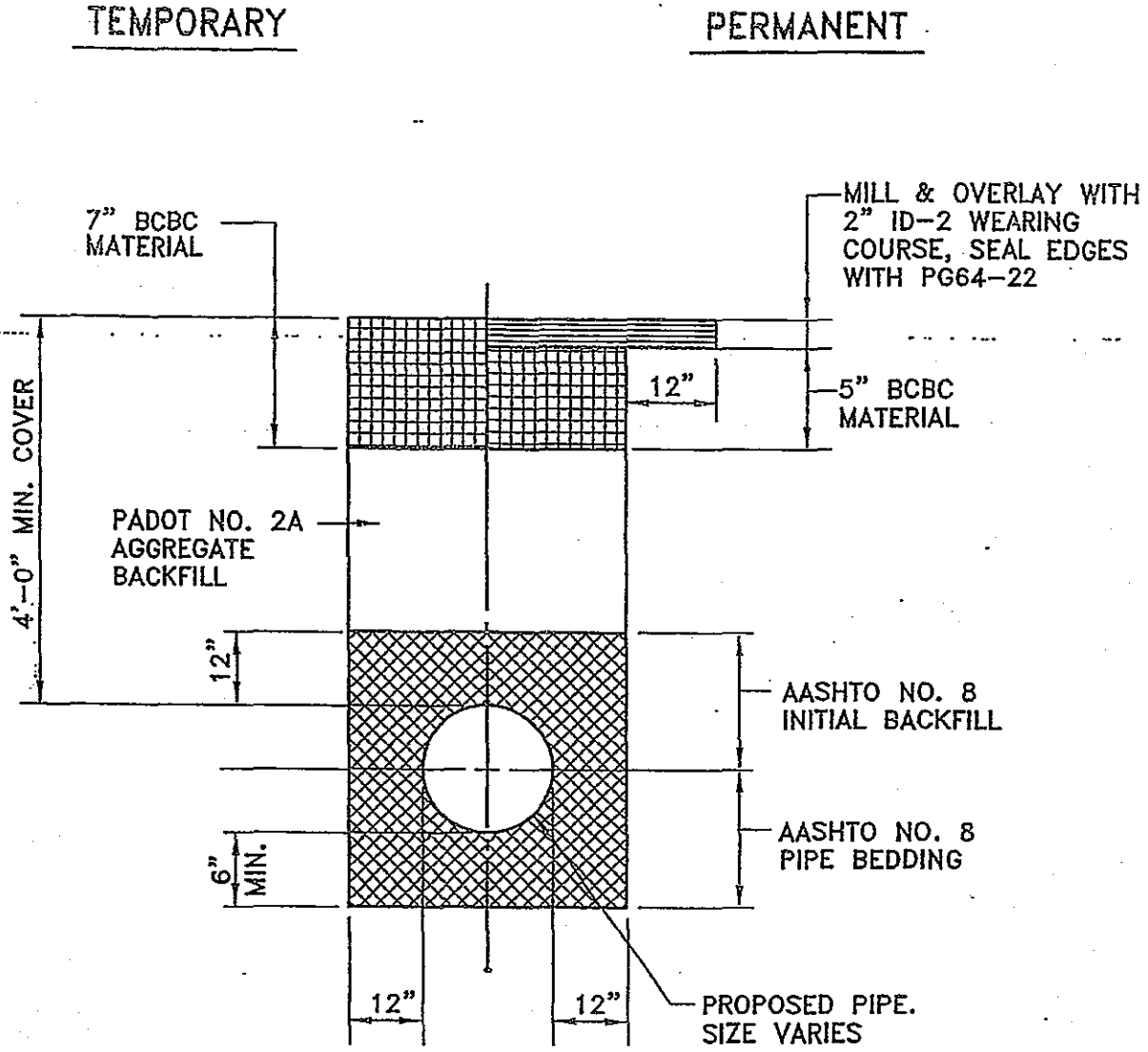


# Leola Sewer Authority

## STANDARD DETAIL - WATER SYSTEM

Hyder

Hyder Consulting, Inc.

# PAVEMENT RESTORATION DETAIL FOR WEST EARL TOWNSHIP ROADS

DATE: FEBRUARY 2001

DETAIL: 2

Dwg. Name: 00325588.DWG Last Revised: 02/16/01 14:12

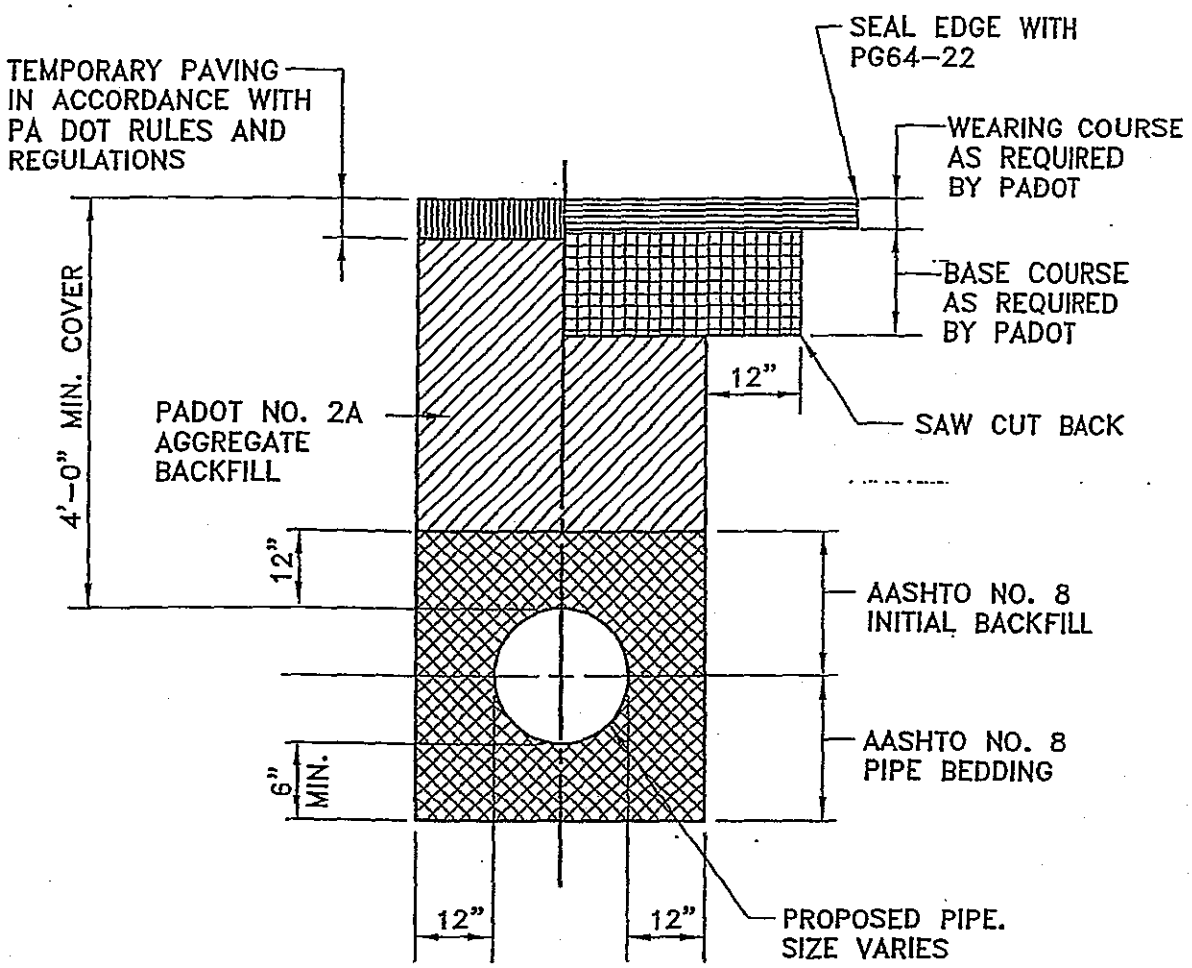


**TEMPORARY**

IN ACCORDANCE WITH PA DOT RULES AND REGULATIONS

**PERMANENT**

IN ACCORDANCE WITH PA DOT RULES AND REGULATIONS

NOTES:

1. ALL WORK TO BE IN ACCORDANCE WITH PADOT PUBLICATION 408.
2. SEE DETAIL 43B FOR PAVEMENT RESTORATION AT ROAD CROSSINGS

| | |
|---|---|
| **Leola Sewer Authority**<br>**STANDARD DETAIL - WATER SYSTEM** | Hyder<br>Hyder Consulting, Inc. |
| **PAVEMENT RESTORATION DETAIL FOR STATE ROADS** | DATE: AUGUST 2000<br>DETAIL: 3 |

Dwg. Name: 00325549.DWG Last Revised: 01/24/01 15:27

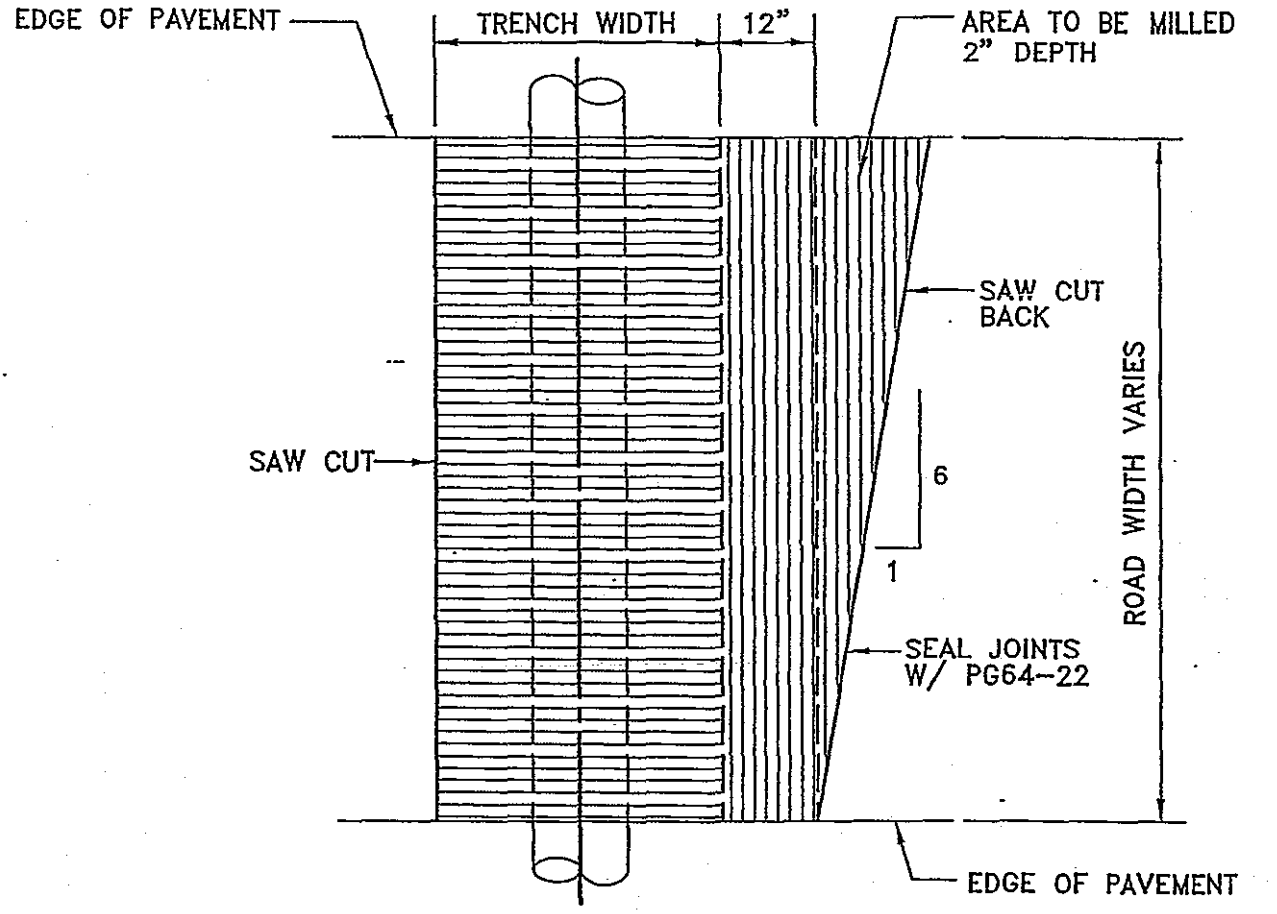


PLAN

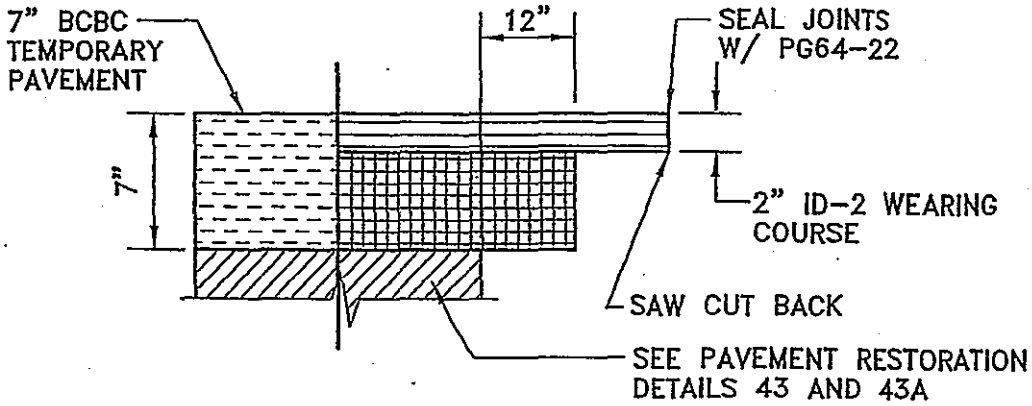


TEMPORARY PERMANENT

SECTION

| | |
|---|---|
| **Leola Sewer Authority**<br>**STANDARD DETAIL - SEWER SYSTEM** | Hyder<br>Hyder Consulting, Inc. |
| **PAVEMENT RESTORATION DETAIL AT ROAD CROSSINGS** | DATE: AUGUST 2000<br>DETAIL: 4 |

Dwg. Name: 00323939.DWG Last Revised: 01/24/01 15:35

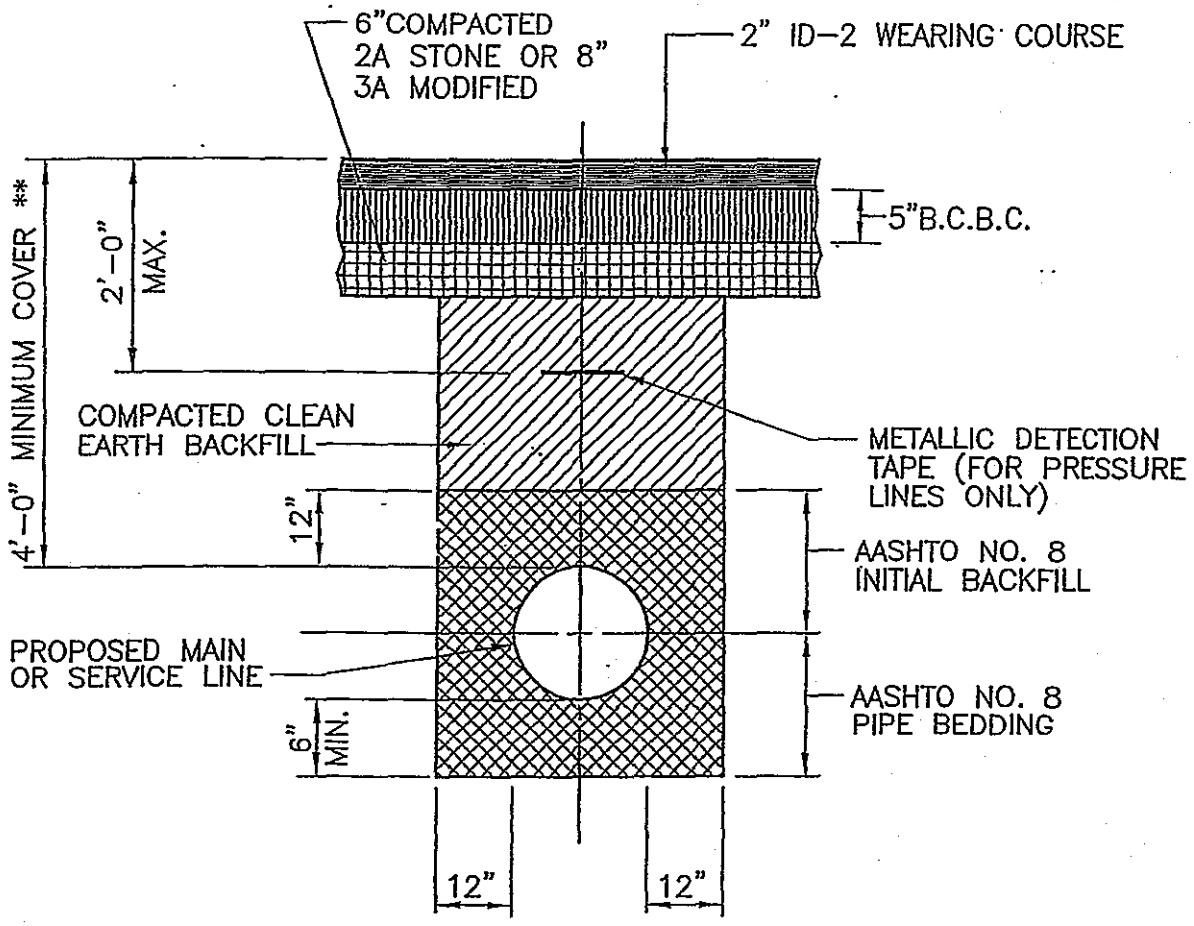


* NOTE: NO STONE, ORGANIC OR OTHER MATERIAL TO EXCEED 3" IN DIAMETER.
** UNLESS OTHERWISE NOTED

| | |
|---|---|
| **Leola Sewer Authority**<br>**STANDARD DETAIL - SEWER SYSTEM** | Hyder<br>Hyder Consulting, Inc. |
| **PAVEMENT RESTORATION FOR NEW TOWNSHIP ROADS** | DATE: AUGUST 2000<br>DETAIL: 5 |

Dwg. Name: 00323067.DWG Last Revised: 01/24/01 15:37

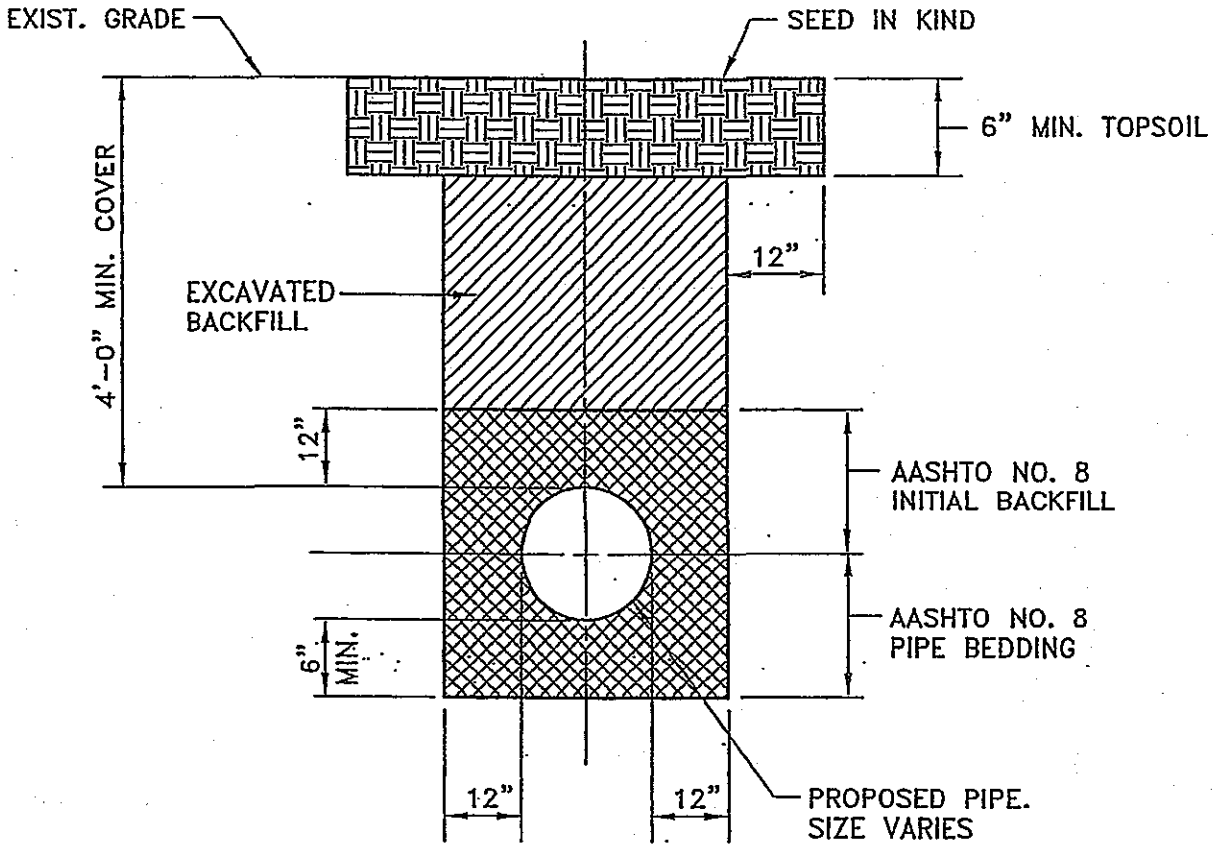


# Leola Sewer Authority

## STANDARD DETAIL - WATER SYSTEM

Hyder

Hyder Consulting, Inc.

# LAWN RESTORATION DETAIL

DATE: JULY 1993

DETAIL: 6

Dwg. Name: 00325551.DWG Last Revised: 01/24/01 15:41

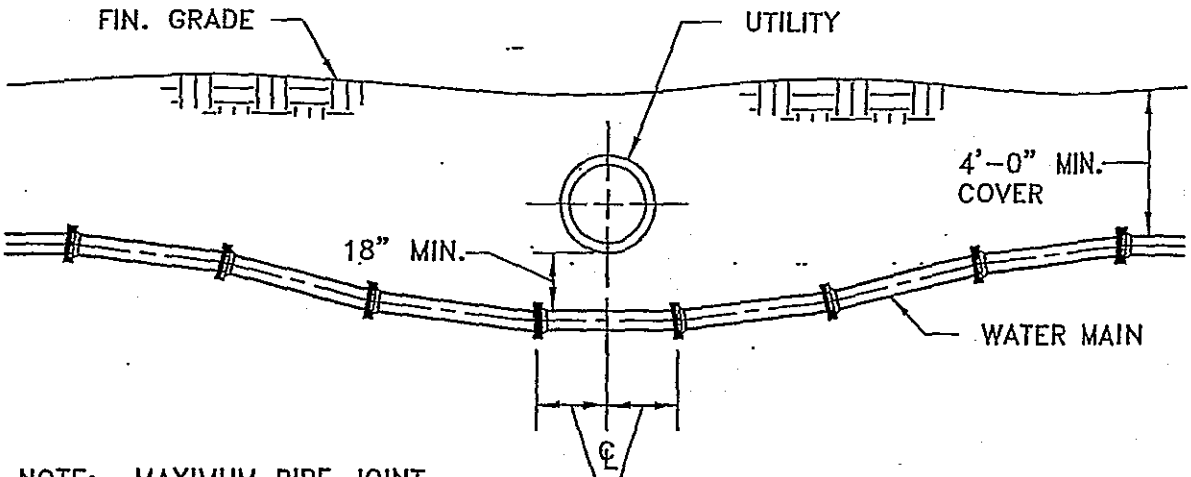


NOTE: MAXIMUM PIPE JOINT DEFLECTIONS TO BE IN ACCORDANCE WITH A.W.W.A. STANDARDS, SECTION C-600.

NOTE: THE UTILITY OWNER MAY, AT THEIR DISCRETION AND IN CONSULTATION WITH THE AUTHORITY, REQUIRE CONCRETE ENCASEMENT OF EITHER THE UTILITY OR THE WATER LINE.

| | |
|---|---|
| **Leola Sewer Authority**<br>**STANDARD DETAIL - WATER SYSTEM** | Hyder<br>Hyder Consulting, Inc. |
| **WATER MAIN CROSSING UTILITIES USING JOINT DEFLECTIONS** | DATE: MARCH 1993<br>DETAIL: 7 |

Dwg. Name: 00325554.DWG Last Revised: 01/24/01 15:42

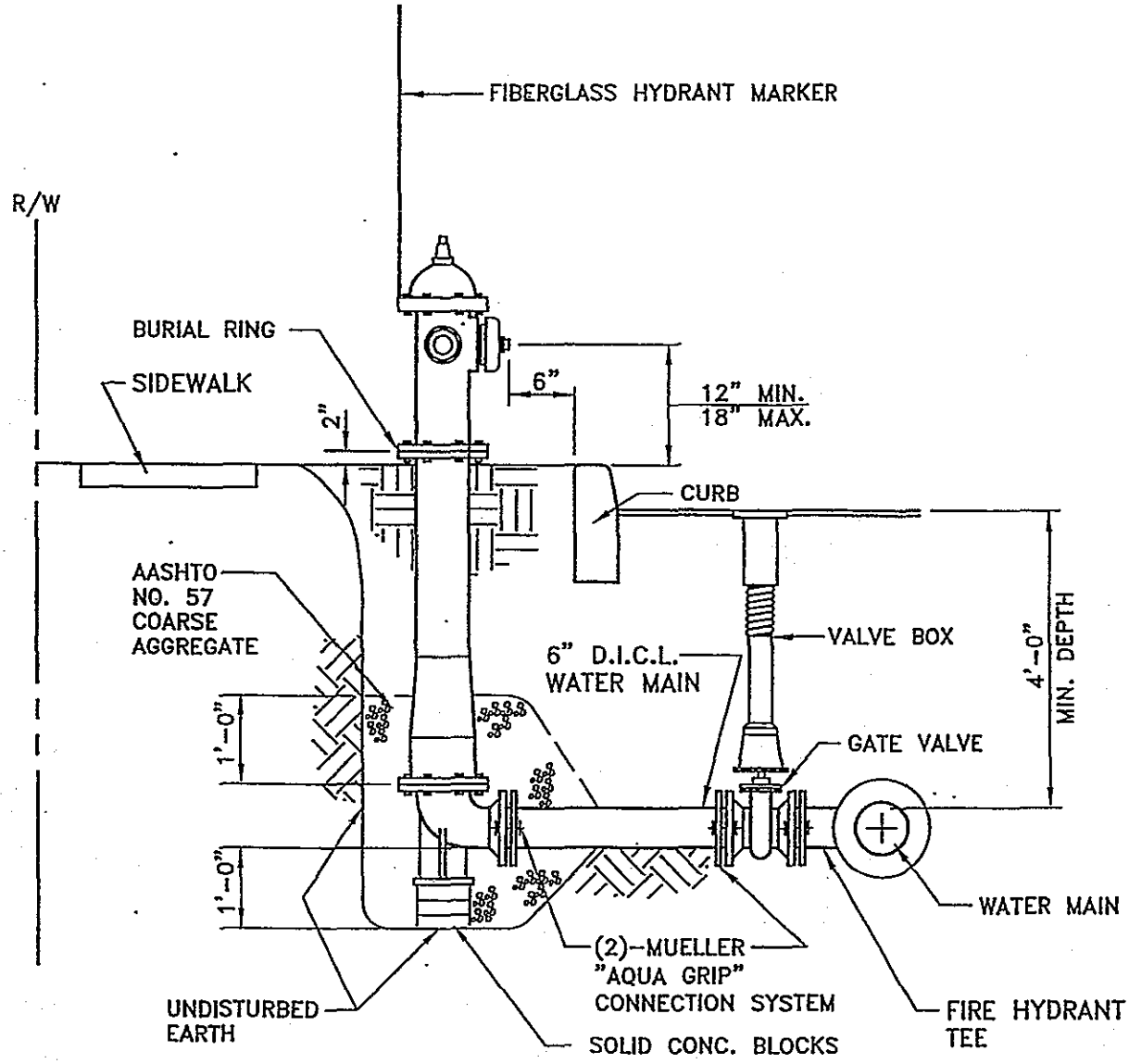


NOTES:

1. IN AREAS WHERE SIDEWALKS ARE NOT REQUIRED, FIRE HYDRANTS SHALL BE SET WITH THE PUMPER NOZZLE CAP LOCATED 2 FEET BEHIND THE BACK FACE OF CURB.

| | |
|---|---|
| **Leola Sewer Authority**<br>**STANDARD DETAIL - WATER SYSTEM** | ARRO Consulting, Inc. |
| **STANDARD FIRE HYDRANT SETTING DETAIL** | DATE: MAY 2003<br>DETAIL: 8 |

Dwg. Name: 00325556.DWG Last Revised: 05/14/03 15:02

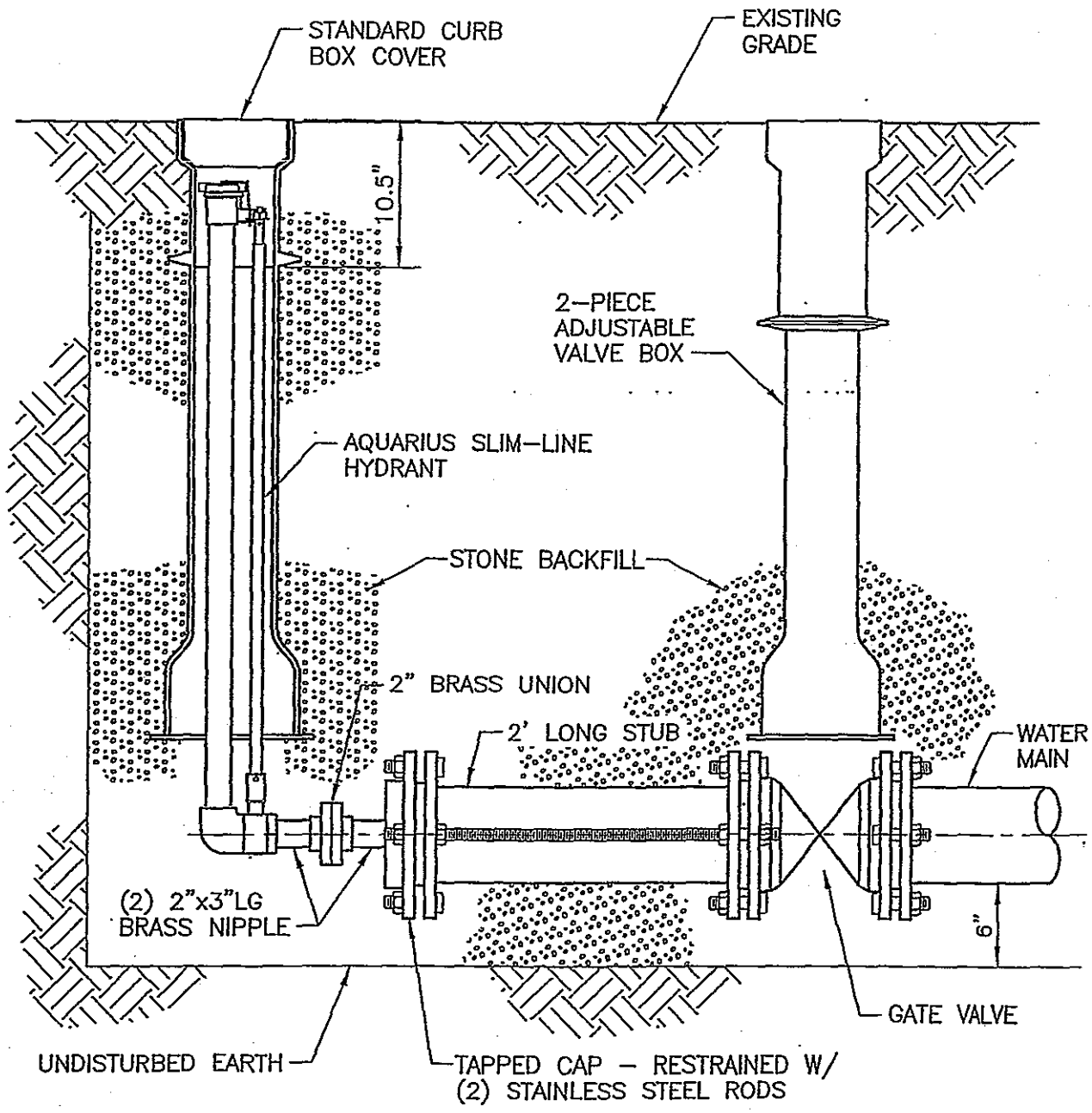


# Leola Sewer Authority

## STANDARD DETAIL - WATER SYSTEM

Hyder

Hyder Consulting, Inc.

# TYPICAL BLOW-OFF HYDRANT DETAIL

DATE: MAY 1997

DETAIL: 9

Dwg. Name: 02771934.DWG Last Revised: 01/24/01 15:47

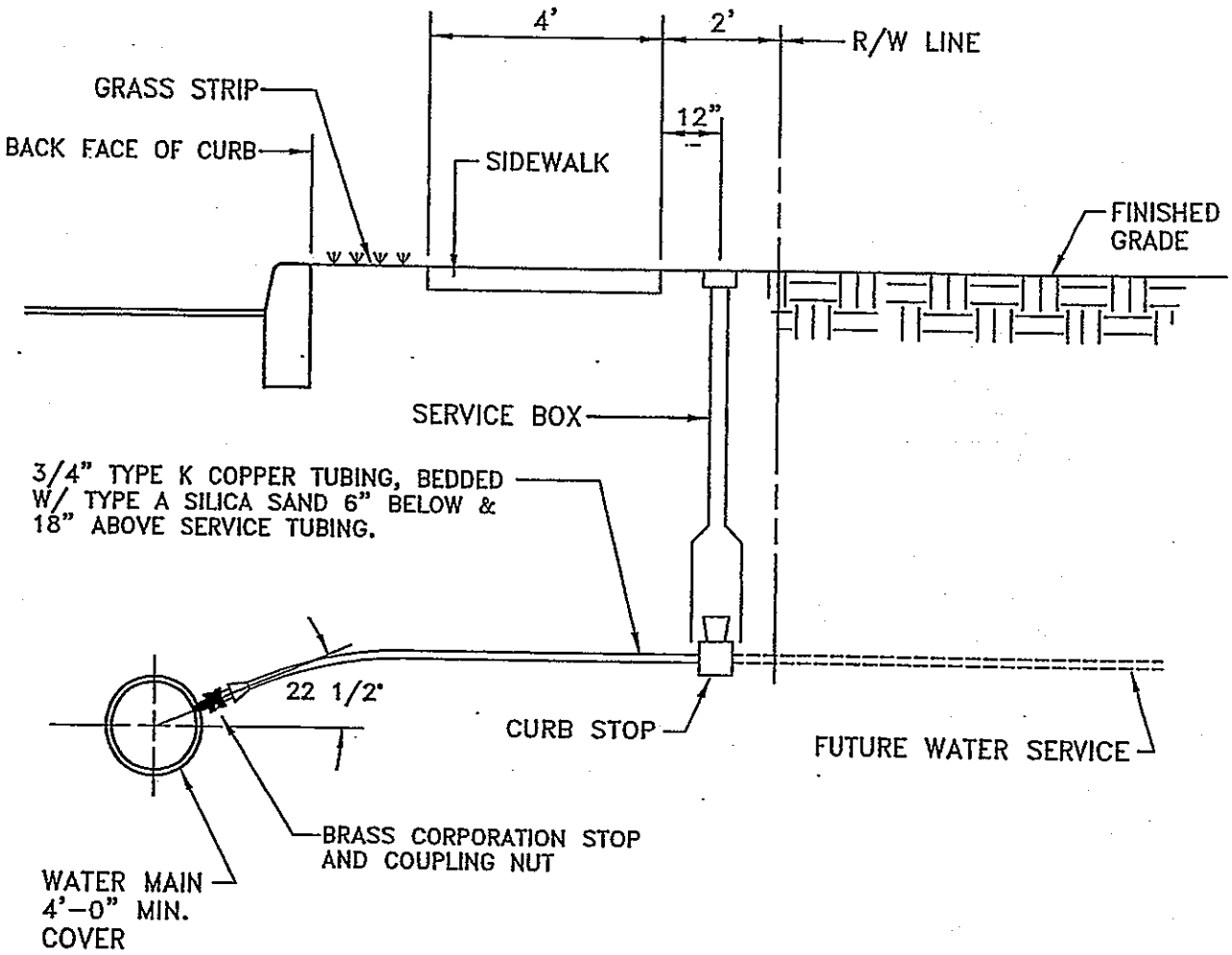


NOTE:
IN AREAS WHERE SIDEWALKS ARE NOT REQUIRED, CURB STOP AND BOX SHALL BE SET 12" BEHIND BACK FACE OF CURB.

# Leola Sewer Authority

## STANDARD DETAIL - WATER SYSTEM

Hyder

Hyder Consulting, Inc.

# STANDARD WATER SERVICE LINE INSTALLATION (ROADWAY W/ CURBING)

DATE: MARCH 1992

DETAIL: 10

Dwg. Name: 00325584.DWG Last Revised: 01/24/01 15:52

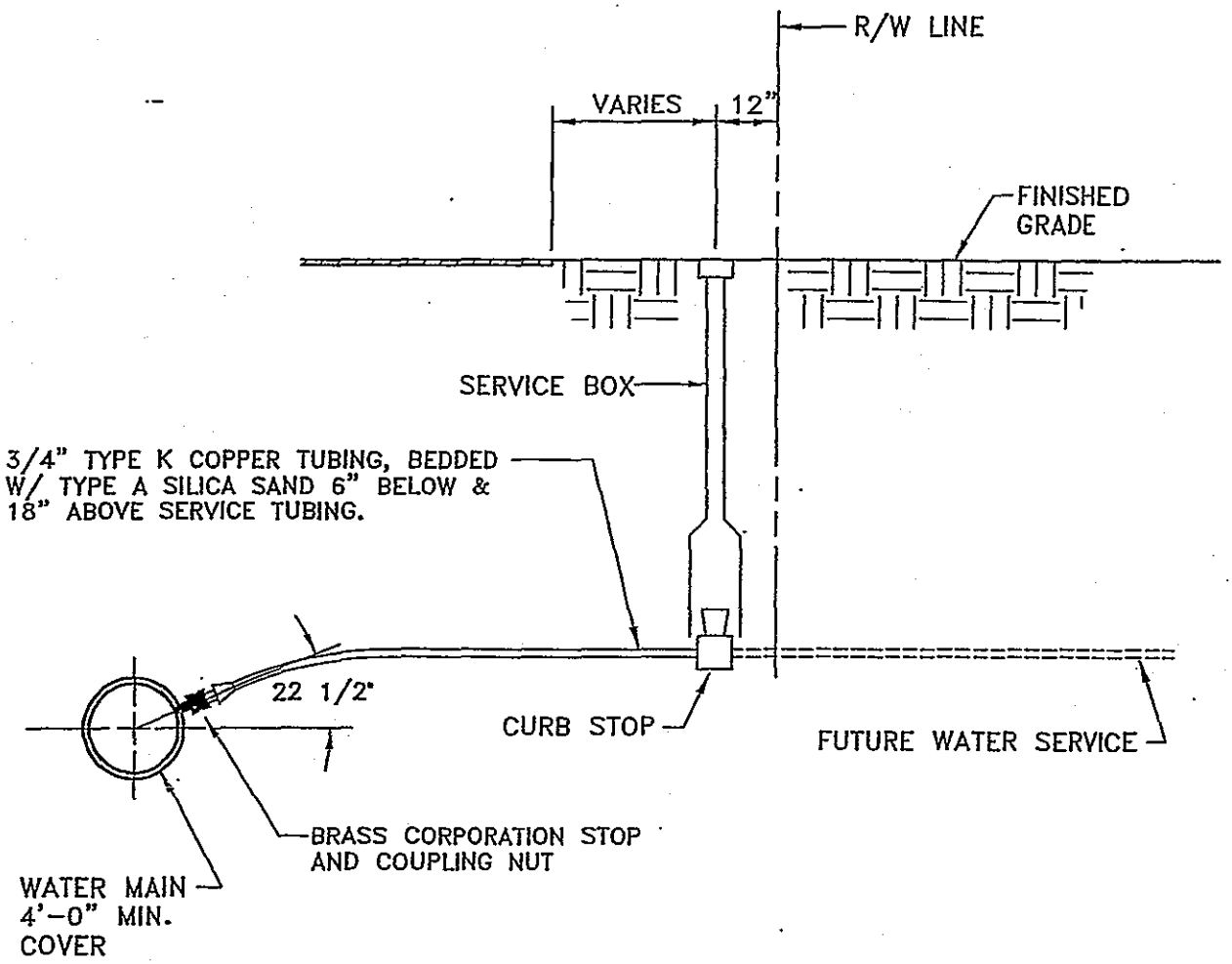


# Leola Sewer Authority

## STANDARD DETAIL - WATER SYSTEM

Hyder

Hyder Consulting, Inc.

# STANDARD WATER SERVICE LINE INSTALLATION (ROADWAY W/O CURBING)

DATE: MARCH 1992

DETAIL: 11

Dwg. Name: 00325585.DWG Last Revised: 01/24/01 15:57

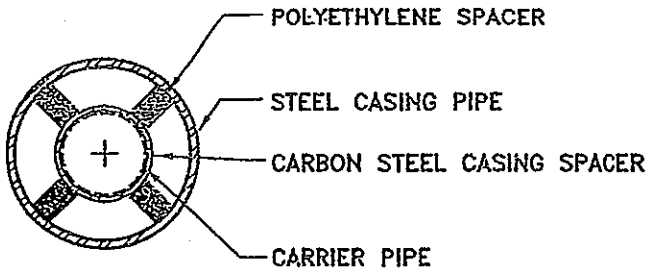


SECTION

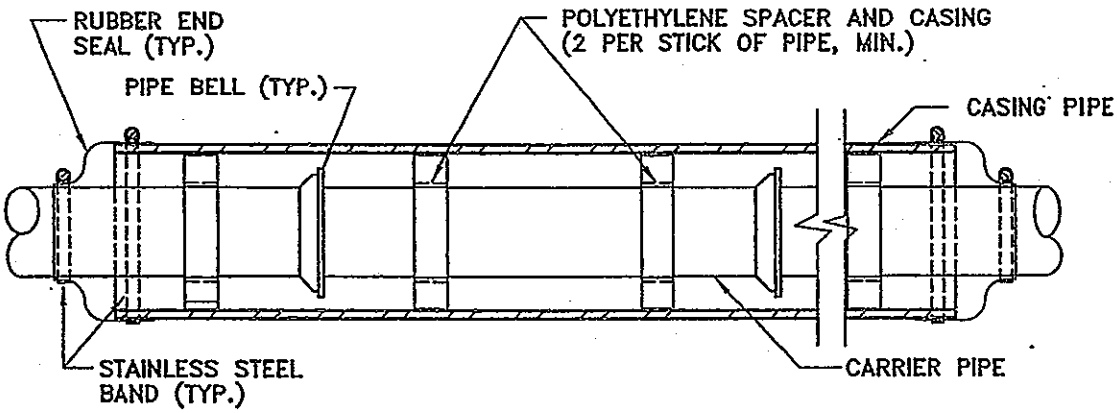


ELEVATION

| | |
|---|---|
| **Leola Sewer Authority**<br>**STANDARD DETAIL - WATER SYSTEM** | Hyder<br>Hyder Consulting, Inc. |
| **STANDARD CASING CRADLE DETAIL** | DATE: FEBRUARY 2001<br>DETAIL: 12 |

Dwg. Name: 00325552.DWG Last Revised: 02/16/01 13:40

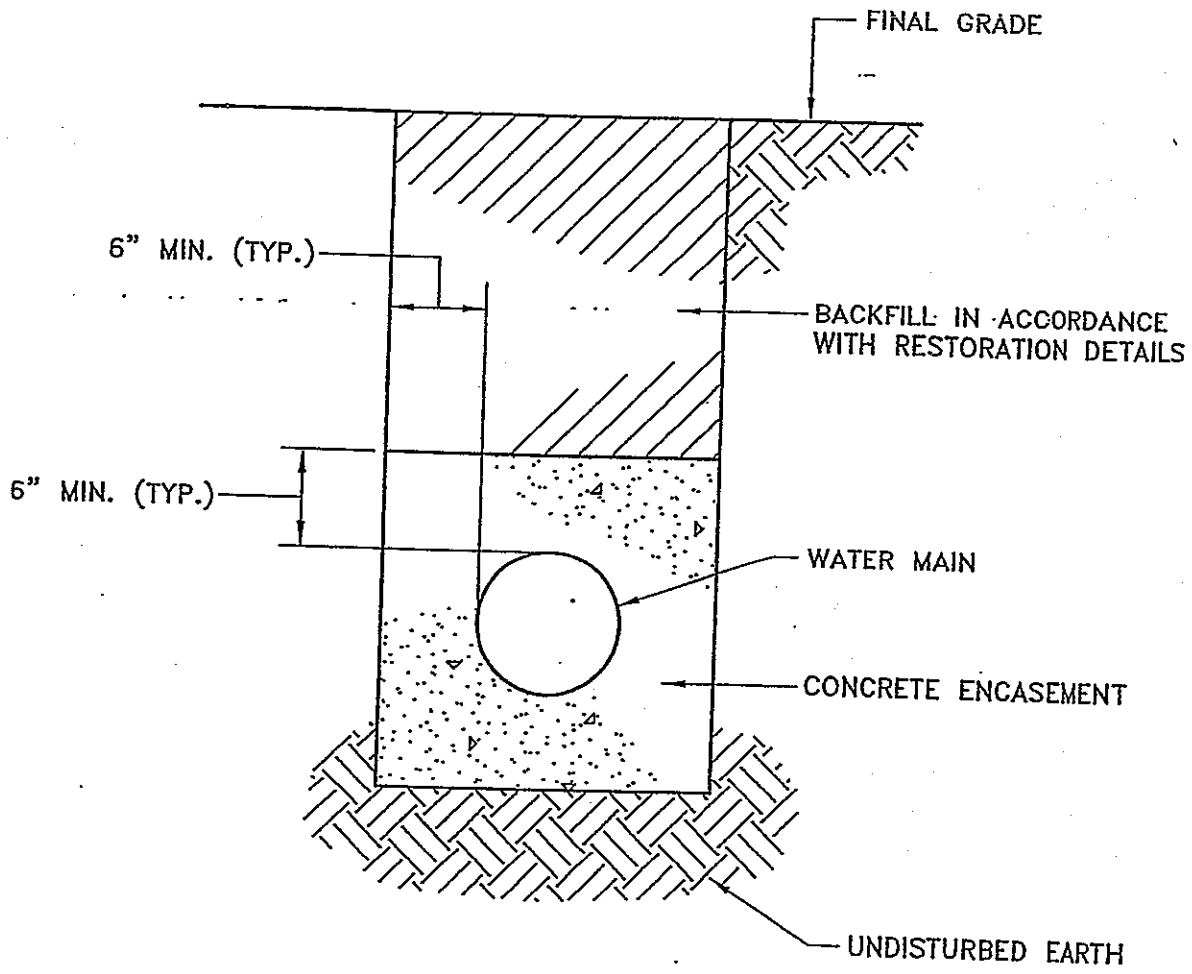


# Leola Sewer Authority

## STANDARD DETAIL - WATER SYSTEM

Hyder

Hyder Consulting, Inc.

# STANDARD CONCRETE ENCASING DETAIL

DATE: MARCH 1992

DETAIL: 13

Dwg. Name: 00325586.DWG Last Revised: 01/24/01 16:03

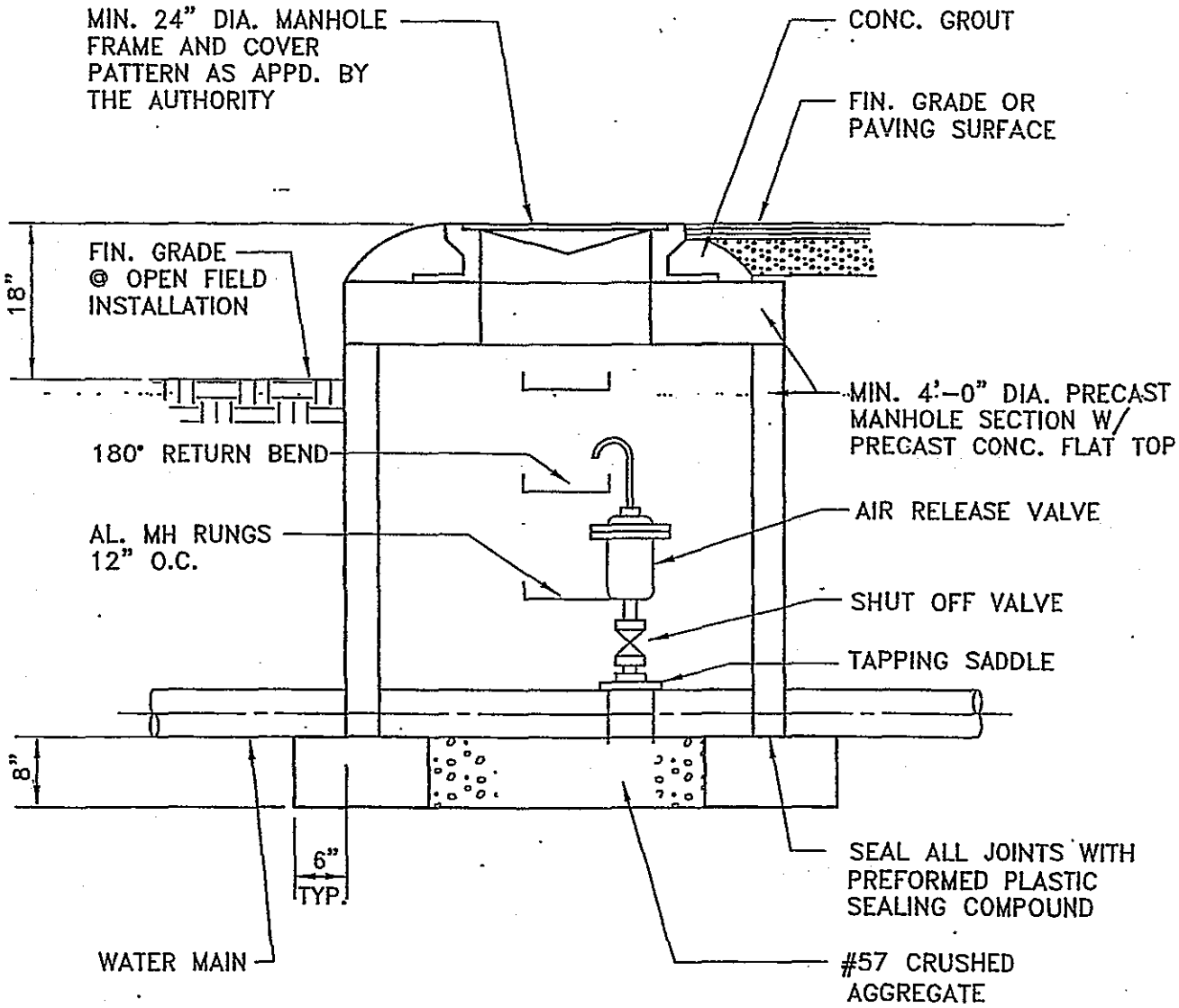


NOTE: FOR LARGE AIR RELEASE VALVES, THE AUTHORITY MAY REQUIRE ADDITIONAL SUPPORT TO PREVENT PIPE SADDLE FROM ROTATING.

| | |
|---|---|
| **Leola Sewer Authority**<br>**STANDARD DETAIL - WATER SYSTEM** | Hyder<br>Hyder Consulting, Inc. |
| **AIR RELEASE VALVE MANHOLE DETAIL** | DATE: MARCH 1992<br>DETAIL: 14 |

Dwg. Name: 00325569.DWG Last Revised: 01/24/01 16:06

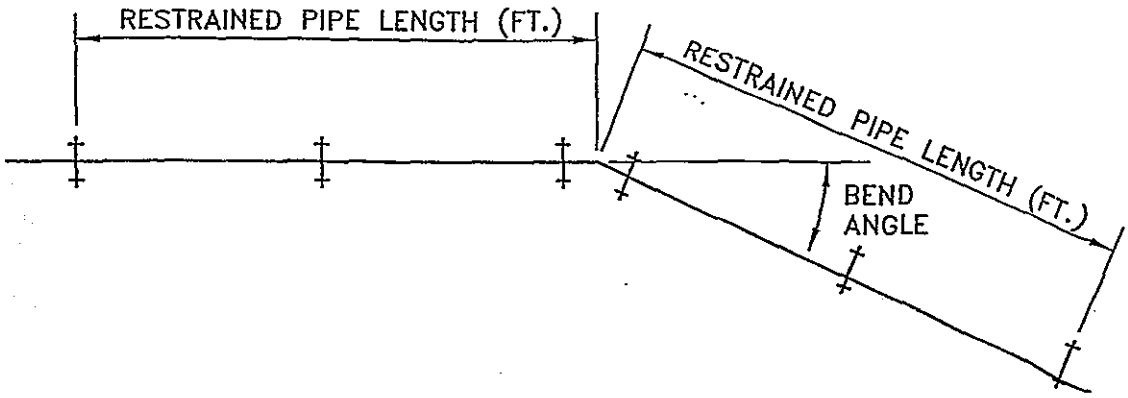


| RESTRAINED PIPE LENGTH SCHEDULE | | | | | |
|---|---|---|---|---|---|
| PIPE DIAMETER | HORIZONTAL & VERTICAL UP BENDS | | | | |
| | 90° | 45° | 22 1/2° | 11 1/4° | PLUGS & TEES |
| 6" | 18.3' | 7.6' | 3.6' | 1.8' | 50' |
| 8" | 24.0' | 9.9' | 4.8' | 2.4' | 65' |
| 10" | 28.6' | 11.9' | 5.7' | 2.8' | 75' |
| 12" | 33.4' | 13.9' | 6.7' | 3.3' | 90' |
| 14" | 38.1' | 15.8' | 7.6' | 3.7' | 100' |
| 16" | 42.4' | 17.6' | 8.4' | 4.2' | 115' |

* ADD 12% TO LENGTH IF PIPE IS POLYETHYLENE ENCASED.

| RESTRAINED PIPE LENGTH SCHEDULE | | | |
|---|---|---|---|
| PIPE DIAMETER | VERTICAL DOWN BENDS | | |
| | 45° | 22 1/2° | 11 1/4° |
| 6" | 23.3' | 13.2' | 7.0' |
| 8" | 29.8' | 16.9' | 9.0' |
| 10" | 35.7' | 20.2' | 10.7' |
| 12" | 41.4' | 23.4' | 12.4' |
| 14" | 46.8' | 26.4' | 14.0' |
| 16" | 52.1' | 29.4' | 15.6' |

* ADD 12% TO LENGTH IF PIPE IS POLYETHYLENE ENCASED.

NOTE: ALL LENGTHS BASED ON 150 PSI MAXIMUM PRESSURE. FOR HIGHER PRESSURES, INCREASE LENGTHS IN PROPORTION TO PRESSURE RATIO.

**Leola Sewer Authority**

**STANDARD DETAIL - WATER SYSTEM**

Hyder

Hyder Consulting, Inc.

# RESTRAINED PIPE LENGTH SCHEDULE

DATE: MARCH 1992

DETAIL: 15

Dwg. Name: 00325833.DWG Last Revised: 01/24/01 16:07

| THRUST BLOCK DIMENSION SCHEDULE (PLUG) | | | | |
|---|---|---|---|---|
| DIM. | LATERAL SIZE | | | |
| | 6" | 8" | 12" | 16" |
| A | 38" | 60" | 112" | 130" |
| B | 24" | 26" | 30" | 42" |

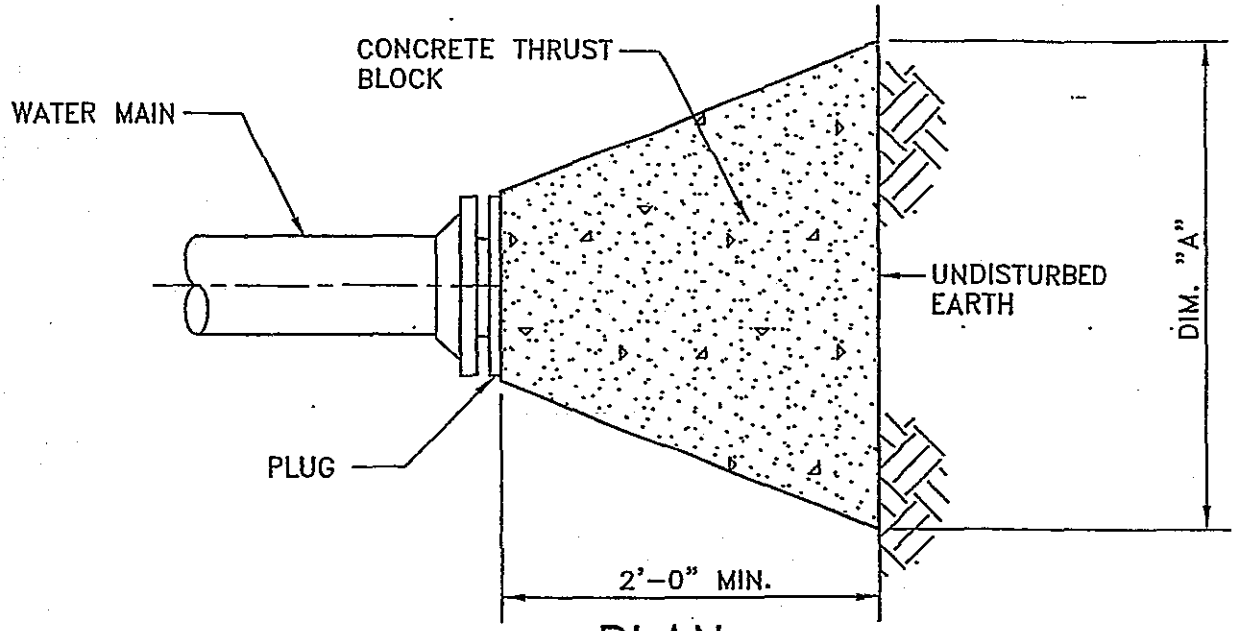


PLAN

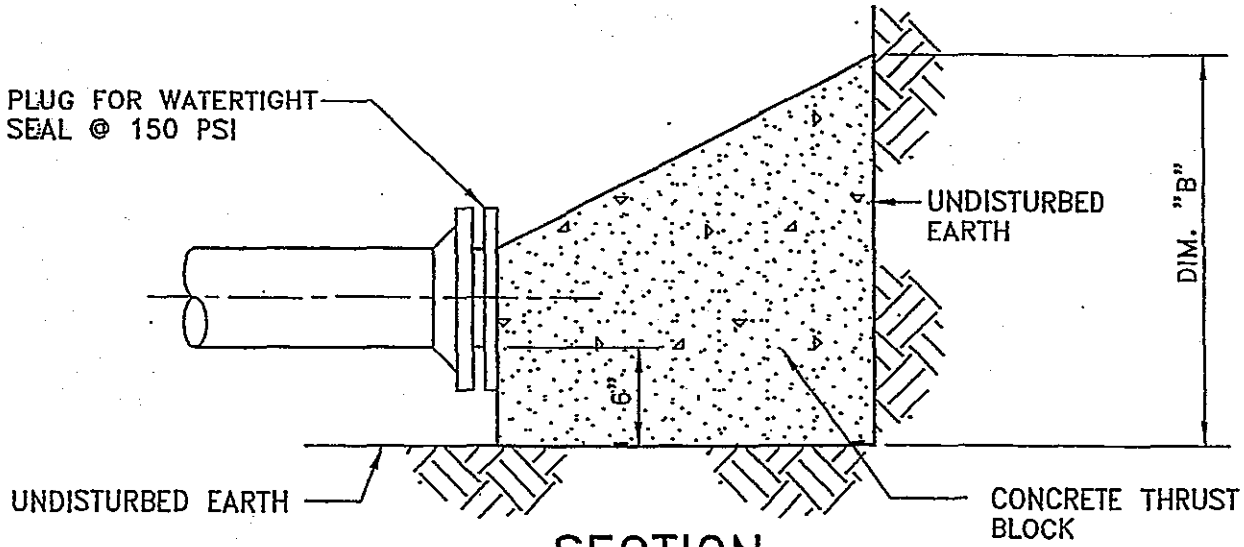


SECTION

**Leola Sewer Authority**

**STANDARD DETAIL - WATER SYSTEM**

Hyder

Hyder Consulting, Inc.

# HORIZONTAL RESTRAINT THRUST BLOCKING DETAIL - PLUGS

DATE: MARCH 1992

DETAIL: 16

Dwg. Name: 00325834.DWG Last Revised: 01/24/01 16:10

# APPENDIX 3

# SAMPLE DEVELOPER'S AGREEMENT

# AGREEMENT

MADE and entered into this _____ day of _____, 20_, by and between LEOLA SEWER AUTHORITY, a municipal authority organized and existing under the Municipality Authorities Act of 1945, as amended, of Lancaster County, Pennsylvania (hereinafter called "AUTHORITY"), and _____, (hereinafter called "OWNER").

WHEREAS, Owner, at its expense, desires to construct and convey to Authority certain water distribution mains and appurtenances, to serve Owner's proposed development known as _ _____, in Upper Leacock Township, Lancaster County, Pennsylvania, on condition that Authority furnish water service to the same; and

WHEREAS, Authority is willing to do this, provided said water distribution mains and appurtenances are constructed at Owner's sole expense in accordance with plans and specifications approved by Authority's Engineers and provided the obligation of the Authority in relation to the same is clearly defined.

NOW, THEREFORE, KNOW ALL MEN BY THESE PRESENTS, that the parties hereto, intending to be legally bound hereby, for themselves and each of their respective heirs, personal representatives, successors and assigns, do, jointly and severally, covenant and agree as follows:

1. Owner agrees to construct water distribution mains and appurtenances in the locations as shown on plans prepared by _____ Sheets _____ through _____ inclusive, dated _____. Said plans and related specifications are incorporated herein by reference thereto. Owner agrees to provide Authority with a completion bond insuring the completion of the water distribution mains and appurtenances (as shown on the aforementioned plans and specifications), issued by a reputable insurance company and approved by the Authority's Solicitor as to form and manner of execution, comparable to the bonding provided to the Township of Upper Leacock for completion of the streets, etc., in Owner's subdivision. Said bond shall be in an amount equal to one hundred ten percent (110%) of the cost of said water facilities, as estimated by Authority's Engineer. In Authority's discretion, a letter of credit drawn on a lending institution acceptable to Authority, in the form and manner approved by Authority's Solicitor, may be substituted, in Authority's discretion, for said completion bond.

2. Authority agrees to accept said facilities upon completion, provided that:

   A. Owner has complied fully with the plans and specifications;

B. Approval of grades and locations has been obtained from all appropriate municipal bodies;

C. Owner shall obtain a Highway or Township Road Occupancy Permit from the Department of Highways of the Commonwealth of Pennsylvania or the appropriate municipality for any laying of a line on public highways (if any), shall pay all expenses in connection with compliance with state or local requirements, and shall hold Authority harmless from any cost in connection with state or local requirements;

D. Owner shall obtain a permit from the Pennsylvania Department of Environmental Resources for construction of the water facilities, (as required), shall pay all expenses in connection with compliance with state or local requirements, and shall hold Authority harmless from any cost in connection with state or local requirements;

E. In the event Owner engages a contractor to construct the facilities, Authority must approve in advance the selection of the contractor and the right is retained by Authority to require that the contractor selected have prior experience in construction of water facilities of the type specified;

F. That Owner has prepared and delivered to the Authority, record plans (one (1) set of reproducible mylars and three (3) sets of prints) delineating the water facilities actually installed. The record plans shall clearly show the location of the water facilities and shall be free of extraneous markings which may obscure the water facilities. The material, size and location of all facilities shall be shown. The location of all valves and fittings shall be triangulated on the plans. The adequacy of the record plans will be determined by the Authority, in its sole discretion. In addition to the record plans, two (2) sets of equipment shop drawings shall be provided to the Authority when requested.

G. That Owner has paid all cost of review and inspection as required in Section 6 of this Agreement.

3. Owner agrees that upon Authority's acceptance of said facilities, title to said facilities as shown on _____, attached hereto, together with all appurtenances thereto, shall be and remain at all times in Authority, its successors and assigns.

4. It is understood by the parties hereto that title to the aforementioned water facilities shall be and remain in Owner until such time as said water facilities are accepted by Authority, and it is further understood that Authority will accept said water facilities only after completion and a final inspection and approval of said facilities.

5. Upon acceptance of said water facilities by Authority, Owner shall convey to Authority rights-of-way or easements for water lines and appurtenant facilities which have been located on private property. Said rights-of-way or easements shall be permanent and shall be in form (legal documentation) satisfactory to the Authority. In the case of rights-of-way or easements for water lines, said rights-of-way or easements shall be twenty (20) feet in width. Installed water facilities shall be conveyed by bill of sale.

6. The Authority will require review of the proposed facilities in addition to inspection and testing during construction of the water facilities. The Owner agrees to pay the cost of any and all reviews, inspections and testing as well as all legal fees incurred by the Authority in connection with this project of Owner, and will deposit with the Authority, prior to the start of construction, cash in an amount sufficient to cover these costs. The amount of the deposit will be determined by the Authority. The Authority will make payments from the account to cover the actual review, inspection, legal and testing costs. Any monies remaining after completion of the facilities shall be returned to the Owner.

If additional money is required to complete the review, inspection testing work or legal fees, the Owner agrees to provide such funds prior to acceptance of the facilities by the Authority.

7. In the event the Owner must perform excavation and construction work within a highway right-of-way and is, therefore, required to obtain a Highway Occupancy Permit from the Pennsylvania Department of Transportation, then Authority agrees to apply for such a permit on behalf of Owner in consideration for the Owner's agreement to indemnify Authority against all costs, losses or claims resulting from the construction. Owner hereby agrees, for itself, its contractees, licensees and all others engaged in installing, maintaining or using the water facilities to be connected to the Authority's distribution system, that the Authority, its successors and assigns and its agents and consulting engineers, shall not be liable for injury to or death of any person whomsoever or for loss or damage to property in the possession, custody or control of such Authority while said excavation and construction work is being performed. Owner further agrees to protect, indemnify and save harmless the Authority, its successors and assigns and its agents and consulting engineers, from and against any and all liability, loss, cost, damage, expense and claims of every kind and character due to injury to or death of any person or loss of or damage to any property whatsoever arising directly or indirectly out of and incident to the installation of the connection of the water between the line owned by the Authority and the Owner's land, which connection will be over the land controlled by the Pennsylvania Department of Transportation and will be the subject of the permit which the latter will issue to the Authority.

8. If, in the construction work, the Owner will be required to use certain blasting operations in the excavation, the Owner agrees to make, execute and deliver to the Commonwealth of Pennsylvania, Department of Transportation, a certificate of insurance as stipulated by the Department of Transportation. All policies shall name the Authority as well as the Commonwealth of Pennsylvania as insured parties, and conditioned that the Owner will save harmless the Authority as well as the Commonwealth of Pennsylvania, Department of Transportation, from any damages whatsoever to its subgrade, subbase, modified subbase, drainage facilities, road metal and any other installments or matters in, under or upon the highway right-of-way for a period of two (2) years from the date of completion of the last work covered by the Highway Occupancy Permit issued to Authority by the Commonwealth of Pennsylvania, Department of Transportation.

9. Owner hereby guarantees for a period of eighteen (18) months from the date of acceptance of the water facilities by the Authority, the stability of all materials and equipment and the workmanship of all labor. Owner further agrees to correct and/or replace all defective materials, equipment and work, as well as all shrinkage, settlement or other faults of any kind

whatsoever arising from the construction, at its own expense and to the satisfaction of the Authority when notified in writing by the Authority to do so.

To secure the aforesaid guarantee, the Owner shall provide the Authority with one of the following:

A. A letter of credit from a commercial banking institution acceptable to the Authority and approved by the Authority's Solicitor as to form and manner of execution for the faithful performance thereof. Said letter of credit shall be for a period of eighteen (18) months commencing from the date of acceptance of the water facilities and shall be in an amount equal to fifteen percent (15%) of the Authority engineer's estimate of construction cost but not less than $5,000.00; or

B. A surety bond issued by a reputable insurance company acceptable to the Authority and approved by the Authority's Solicitor as to form and manner of execution for the faithful performance thereof. Said surety bond shall be for a period of eighteen (18) months commencing from the date of acceptance of the water facilities and shall be written in a face amount equal to fifteen percent (15%) of the Authority engineer's estimate of construction cost but not less than $5,000.00; or

C. A cash payment to be maintained by the Authority in a non-interest bearing escrow account for a period of eighteen (18) months from the date of acceptance of the water facilities in an amount equal to fifteen percent (15%) of the Authority engineer's estimate of construction cost but not less than $5,000.00.

10. This Agreement has been executed by Authority pursuant to an oral motion approved at its meeting duly and lawfully held on _____, 20__.

IN WITNESS WHEREOF, this Agreement has been executed by the parties hereto, the day and year first above written.

LEOLA SEWER AUTHORITY

By: _____
Chairman

(AUTHORITY SEAL)

Attest: _____
Secretary

OWNER

_____